AIR EMISSION PERMIT NO. 13500002- 001

IS ISSUED TO

Marvin Lumber & Cedar Company

for the following facility:

MARVIN WINDOWS AND DOORS
Highway 11 West
Warroad, Roseau County, Minnesota

The emission units, control equipment and emission stacks at the stationary source authorized in this permit are as described in the following permit application:

Permit Application Type	Application Date
Total Facility Operating Permit	04/21/1995 (Final updated prior to notice date)
Minor Amendment	01/28/2005
Minor Amendment	10/20/2005

This permit supersedes all previous air permits issued to this Facility, and authorizes the Permittee to operate the stationary source at the address listed above unless otherwise noted in Table A. The Permittee must comply with all the conditions of the permit. Any changes or modifications to the stationary source must be performed in compliance with Minn. R. 7007.1150 to 7007.1500. Terms used in the permit are as defined in the state air pollution control rules unless the term is explicitly defined in the permit.

Permit Type: Federal; Pt 70/Incorporates Existing NSR Conditions

Issue Date: March 5, 2007

Expiration: March 5, 2012
All Title I Conditions do not expire.

Richard J. Sandberg, Manager
Air Quality Permits Section
Industrial Division

for Brad Moore
Commissioner
Minnesota Pollution Control Agency

TABLE OF CONTENTS

Notice to the Permittee

Permit Shield

Facility Description

Table A: Limits and Other Requirements

Table B: Submittals

Appendices:
- **I. Wood Treatment Calculations**
- **II. Insignificant Activities**
- **III. Stack Parameters**

NOTICE TO THE PERMITTEE:

Your stationary source may be subject to the requirements of the Minnesota Pollution Control Agency's (MPCA) solid waste, hazardous waste, and water quality programs. If you wish to obtain information on these programs, including information on obtaining any required permits, please contact the MPCA general information number at:

Metro Area	(651) 296-6300
Outside Metro Area	1-800-657-3864
TTY	(651) 282-5332

The rules governing these programs are contained in Minn. R. chs. 7000-7105. Written questions may be sent to: Minnesota Pollution Control Agency, 520 Lafayette Road North, St. Paul, Minnesota 55155-4194.

Questions about this air emission permit or about air quality requirements can also be directed to the telephone numbers and address listed above.

PERMIT SHIELD:

Subject to the limitations in Minn. R. 7007.1800, compliance with the conditions of this permit shall be deemed compliance with the specific provision of the applicable requirement identified in the permit as the basis of each condition. Subject to the limitations of Minn. R. 7007.1800 and 7017.0100, subp. 2, notwithstanding the conditions of this permit specifying compliance practices for applicable requirements, any person (including the Permittee) may also use other credible evidence to establish compliance or noncompliance with applicable requirements.

FACILITY DESCRIPTION:

Marvin Lumber and Cedar Company (the Permittee) owns and operates Marvin Windows and Doors (the Facility). The Facility manufactures wood windows and doors for residential and commercial application.

The manufacturing process consists mainly of wood milling, wood treatment, assembly, coating, and shipping. The Facility also has several boilers and emergency generators as well as several processes that qualify as insignificant activities. The main emissions are Volatile Organic Compounds (VOC), Particulate Matter and Particulate Matter less than 10 microns (PM/PM_{10}) and various other pollutants from the combustion of wood, diesel fuel, natural gas, and propane. The permit contains requirements that limit emissions of Nitrogen Oxides (NOx), VOCs, HAPs, and PM/PM_{10}.

TABLE A: LIMITS AND OTHER REQUIREMENTS

Facility Name: Marvin Windows & Doors

Permit Number: 13500002 - 001

Table A contains limits and other requirements with which your facility must comply. The limits are located in the first column of the table (What To do). The limits can be emission limits or operational limits. This column also contains the actions that you must take and the records you must keep to show that you are complying with the limits. The second column of Table A (Why to do it) lists the regulatory basis for these limits. Appendices included as conditions of your permit are listed in Table A under total facility requirements.

Subject Item: **Total Facility**

What to do	Why to do it
OPERATIONAL REQUIREMENTS	hdr
The Permittee shall comply and, upon written request, demonstrate compliance with National Primary and Secondary Ambient Air Quality Standards, 40 CFR pt. 50, and the Minnesota Ambient Air Quality Standards, Minn. R. 7009.0010 to 7009.0080.	40 CFR pt. 50; Minn. Stat. Section 116.07, subds. 4a & 9; Minn. R. 7007.0100, supbs. 7A, 7L & 7M; Minn. R. 7007.0800, subps. 1, 2 & 4; Minn. R. 7009.0100-7009.0080
Circumvention: Do not install or use a device or means that conceals or dilutes emissions, which would otherwise violate a federal or state air pollution control rule, without reducing the total amount of pollutant emitted.	Minn. R. 7011.0020
Air Pollution Control Equipment: Operate all pollution control equipment whenever the corresponding process equipment and emission units are operated, unless otherwise noted in Table A.	Minn. R. 7007.0800, subp. 2; Minn. R. 7007.0800, subp. 16(J)
Operation and Maintenance Plan: Retain at the stationary source an operation and maintenance plan for all air pollution control equipment. At a minimum, the O & M plan shall identify all air pollution control equipment and shall include a preventative maintenance program for that equipment, a description of (the minimum but not necessarily the only) corrective actions to be taken to restore the equipment to proper operation to meet applicable permit conditions, a description of the employee training program for proper operation and maintenance of the control equipment, and the written or electronic records kept to demonstrate plan implementation.	Minn. R. 7007.0800, subp. 14 and Minn. R. 7007.0800, subp. 16(J)
Operation Changes: In any shutdown, breakdown, or deviation the Permittee shall immediately take all practical steps to modify operations to reduce the emission of any regulated air pollutant. The Commissioner may require feasible and practical modifications in the operation to reduce emissions of air pollutants. No emissions units that have an unreasonable shutdown or breakdown frequency of process or control equipment shall be permitted to operate.	Minn. R. 7019.1000, subp. 4
Fugitive Emissions: Do not cause or permit the handling, use, transporting, or storage of any material in a manner which may allow avoidable amounts of particulate matter to become airborne. Comply with all other requirements listed in Minn. R. 7011.0150.	Minn. R. 7011.0150
Noise: The Permittee shall comply with the noise standards set forth in Minn. R. 7030.0010 to 7030.0080 at all times during the operation of any emission units. This is a state only requirement and is not enforceable by the EPA Administrator or citizens under the Clean Air Act.	Minn. R. 7030.0010 - 7030.0080
Inspections: The Permittee shall comply with the inspection procedures and requirements as found in Minn. R. 7007.0800, subp. 9(A).	Minn. R. 7007.0800, subp. 9(A)
The Permittee shall comply with the General Conditions listed in Minn. R. 7007.0800, subp. 16.	Minn. R. 7007.0800, subp. 16
This permit shall not alter or affect the liability of an owner or operator for any violation of applicable requirements prior to or at the time of permit issuance.	Minn. R. 7007.1800, subp. (C)(2)
The facility currently uses ozone-depleting substances as defined in 40 CFR Section 82. Sections 601-618 of the 1990 Clean Air Act Amendments and 40 CFR Section 82 may apply to your facility. Read Sections 601-618 and 40 CFR Section 82 to determine all the requirements that apply to your facility.	40 CFR Section 82
Personnel repairing or servicing MVACs or MVAC-like appliances must use equipment approved pursuant to 40 CFR Section 82.36 and be properly trained and certified by a technician certification program approved by the Administrator pursuant to 40 CFR Section 82.40.	40 CFR Section 82, subp. B; 40 CFR Section 82.34
Refrigerant recycling equipment must be certified by the Administrator or an independent standards testing organization approved by the Administrator under 40 CFR Section 82.38 to meet the standards in subp. B, Appendices A-F.	40 CFR Section 82.36

Facility Name: Marvin Windows & Doors

Permit Number: 13500002 - 001

Any person who owns approved refrigerant recycling equipment certified under 40 CFR Section 82.36(a)(2) must maintain records of the name and address of any facility to which refrigerant is sent. Any person who owns approved refrigerant recycling equipment must retain records demonstrating that all persons authorized to operate the equipment are currently certified under 40 CFR Section 82.40. Maintain records on-site for a minimum of three years.	40 CFR Section 82.42(b)
Technicians must be certified by an approved program.	40 CFR Section 82.161
Certify that approved refrigerant recycling equipment is being used.	40 CFR Section 82.162
(k) Owners/operators of appliances normally containing 50 or more pounds of refrigerant must keep servicing records documenting the date and type of service, as well as the quantity of refrigerant added. The owner/operator must keep records of refrigerant purchased and added to such appliances in cases where owners add their own refrigerant. (l) Maintain a copy of technician certifications. (m) Records must be kept for a minimum of three years.	40 CFR Section 82.166(k), (l) and (m)
MONITORING REQUIREMENTS	hdr
Monitoring Equipment Calibration: Annually calibrate all required monitoring equipment (any requirements applying to continuous emission monitors are listed separately in this permit).	Minn. R. 7007.0800, subp. 4(D)
Operation of Monitoring Equipment: Unless otherwise noted in Tables A, B, and/or C, monitoring a process or control equipment connected to that process is not necessary during periods when the process is shutdown, or during checks of the monitoring systems, such as calibration checks and zero and span adjustments. If monitoring records are required, they should reflect any such periods of process shutdown or checks of the monitoring system.	Minn. R. 7007.0800, subp. 4(D)
PERFORMANCE TESTING	hdr
Performance Testing: Conduct all performance tests in accordance with Minn. R. ch. 7017 unless otherwise noted in Tables A, B, and/or C.	Minn. R. 7017
Performance Test Notifications and Submittals: Performance Tests are due as outlined in Tables A and B of the permit. See Table B for additional testing requirements. Performance Test Notification (written): due 30 days before each Performance Test Performance Test Plan: due 30 days before each Performance Test Performance Test Pre-test Meeting: due 7 days before each Performance Test Performance Test Report: due 45 days after each Performance Test Performance Test Report - Microfiche Copy: due 105 days after each Performance Test The Notification, Test Plan, and Test Report may be submitted in alternative format as allowed by Minn. R. 7017.2018.	Minn. R. 7017.2030, subp. 1-4, Minn. R. 7017.2018, Minn. R. 7017.2035, subp. 1-2
Limits set as a result of a performance test (conducted before or after permit issuance) apply until superseded as specified by Minn. R. 7017.2025 following formal review of a subsequent performance test on the same unit.	Minn. R. 7017.2025
Performance Test: due 1,096 days after Permit Issuance, the Permittee shall conduct industrial hygiene (IH) indoor air quality testing once prior to the expiration of the permit in lieu of individual hood certification testing. The IH testing will be used to demonstrate that non-captured emissions from GP001, GP002, GP003, GP004, GP005, P006, GP009, GP011 and GP021 remain negligible. MPCA stack testing staff must review and approve test plan prior to testing. Test results shall be submitted to the MPCA within 45 days after completion of the testing.	40 CFR Section 52.21; Minn. R. 7007.3000; Minn. R. 7011.0070, subp. 2; Minn. R. 7017.2035
MODELING REQUIREMENTS	hdr
Submit modeling data as specified in MPCA guidance for Modeling Information Requests for NOx within 1,096 days of permit issuance. This modeling information is for data collection purposes, no modeling analysis is required at this time. This is a state only requirement and is not enforceable by the EPA Administrator or citizens under the CAA.	Minn. R. 7007.0800, subp. 2

Facility Name: Marvin Windows & Doors

Permit Number: 13500002 - 001

Parameters Used in Modeling: The stack heights, emission rates, and other parameters used in the modeling for Air Emission Permit No. 1001A-93-OT-1 are listed in the Appendix of this permit. The Permittee must submit to the Commissioner for approval any revisions of these parameters and must wait for a written approval before making such changes. The information submitted must include, at a minimum, the locations, heights and diameters of the stacks, locations and dimensions of nearby buildings, the velocity and temperatures of the gases (continued)	Title I Condition: 40 CFR Section 52.21(k); Minn. R. 7007.3000
(continued) emitted, and the emission rates. The plume dispersion characteristics due to the revisions of the information must be equivalent to or better than the dispersion characteristics modeled in the most recent Air Quality Impacts Analysis. The Permittee shall demonstrate this equivalency in the proposal. If the information does not demonstrate equivalent or better dispersion characteristics, or if a conclusion cannot readily be made about the dispersion, the Permittee must remodel.	(continued) Title I Condition: 40 CFR Section 52.21(k); Minn. R. 7007.3000
For changes that do not involve an increase in an emission rate and that do not require a permit amendment, this proposal must be submitted as soon as practicable, but no less than 60 days before beginning actual construction of the stack or associated emission unit. For changes involving increases in emission rates and that require a minor permit amendment, the proposal must be submitted as soon as practicable, but no less than 60 days before beginning actual construction of the stack or associated emission unit. For changes involving increases in emission rates and that require a permit amendment other than a minor amendment, the proposal must be submitted with the permit application.	Title I Condition: 40 CFR Section 52.21(k); Minn. R. 7007.3000
RECORDKEEPING	hdr
Recordkeeping: Retain all records at the stationary source for a period of five (5) years from the date of monitoring, sample, measurement, or report. Records which must be retained at this location include all calibration and maintenance records, all original recordings for continuous monitoring instrumentation, and copies of all reports required by the permit. Records must conform to the requirements listed in Minn. R. 7007.0800, subp. 5(A).	Minn. R. 7007.0800, subp. 5(C)
Recordkeeping: Maintain records describing any insignificant modifications (as required by Minn. R. 7007.1250, subp. 3) or changes contravening permit terms (as required by Minn. R. 7007.1350 subp. 2), including records of the emissions resulting from those changes.	Minn. R. 7007.0800, subp. 5(B)
REPORTING/SUBMITTALS	hdr
Shutdown Notifications: Notify the Commissioner at least 24 hours in advance of a planned shutdown of any control equipment or process equipment if the shutdown would cause any increase in the emissions of any regulated air pollutant. If the owner or operator does not have advance knowledge of the shutdown, notification shall be made to the Commissioner as soon as possible after the shutdown. However, notification is not required in the circumstances outlined in Items A, B and C of Minn. R. 7019.1000, subp. 3. At the time of notification, the owner or operator shall inform the Commissioner of the cause of the shutdown and the estimated duration. The owner or operator shall notify the Commissioner when the shutdown is over.	Minn. R. 7019.1000, subp. 3
Breakdown Notifications: Notify the Commissioner within 24 hours of a breakdown of more than one hour duration of any control equipment or process equipment if the breakdown causes any increase in the emissions of any regulated air pollutant. The 24-hour time period starts when the breakdown was discovered or reasonably should have been discovered by the owner or operator. However, notification is not required in the circumstances outlined in Items A, B and C of Minn. R. 7019.1000, subp. 2. At the time of notification or as soon as possible thereafter, the owner or operator shall inform the Commissioner of the cause of the breakdown and the estimated duration. The owner or operator shall notify the Commissioner when the breakdown is over.	Minn. R. 7019.1000, subp. 2
Notification of Deviations Endangering Human Health or the Environment: As soon as possible after discovery, notify the Commissioner or the state duty officer, either orally or by facsimile, of any deviation from permit conditions which could endanger human health or the environment.	Minn. R. 7019.1000, subp. 1

Facility Name: Marvin Windows & Doors

Permit Number: 13500002 - 001

Notification of Deviations Endangering Human Health or the Environment Report: Within 2 working days of discovery, notify the Commissioner in writing of any deviation from permit conditions which could endanger human health or the environment. Include the following information in this written description: 1. the cause of the deviation; 2. the exact dates of the period of the deviation, if the deviation has been corrected; 3. whether or not the deviation has been corrected; 4. the anticipated time by which the deviation is expected to be corrected, if not yet corrected; and 5. steps taken or planned to reduce, eliminate, and prevent reoccurrence of the deviation.	Minn. R. 7019.1000, subp. 1
Application for Permit Amendment: If a permit amendment is needed, submit an application in accordance with the requirements of Minn. R. 7007.1150 through Minn. R. 7007.1500. Submittal dates vary, depending on the type of amendment needed.	Minn. R. 7007.1150 through Minn. R. 7007.1500
Extension Requests: The Permittee may apply for an Administrative Amendment to extend a deadline in a permit by no more than 120 days, provided the proposed deadline extension meets the requirements of Minn. R. 7007.1400, subp. 1(H).	Minn. R. 7007.1400, subp. 1(H)
Emission Inventory Report: due on or before April 1 of each calendar year following permit issuance. To be submitted on a form approved by the Commissioner.	Minn. R. 7019.3000 through Minn. R. 7019.3100
Emission Fees: due 60 days after receipt of an MPCA bill.	Minn. R. 7002.0005 through Minn. R. 7002.0095
DETERMINING IF A PROJECT/MODIFICATION IS SUBJECT TO NEW SOURCE REVIEW	hdr
These requirements apply where there is a reasonable possibility that a proposed project, analyzed using the actual-to-projected-actual (ATPA) test and found to not be part of a major modification, may result in a significant emissions increase. If the ATPA test is not used for a particular project, or if there is not a reasonable possibility that the proposed project could result in a significant emissions increase, then these requirements do not apply to that project. Even though a particular modification is not subject to New Source Review, a permit amendment, recordkeeping, or notification may still be required under Minn. R. 7007.1150 - 7007.1500.	Title I Condition: 40 CFR Section 52.21(r)(6) and Minn. R. 7007.3000
Preconstruction Documentation - Before beginning actual construction on a project, the Permittee shall document the following information: 1. A description of the project 2. Identification of the emission unit(s) whose emissions of an NSR pollutant could be affected. 3. A description of the applicability test used to determine that the project is not a major modification for any regulated NSR pollutant, including the baseline actual emissions, the potential emissions, the projected actual emissions, the amount of emissions excluded due to increases not associated with the modification and that the unit(s) could have accommodated during the baseline period, an explanation of why the amounts were excluded, and any creditable contemporaneous increases and decreases that were considered in the determination. The Permittee shall maintain records of this documentation.	Title I Condition: 40 CFR Section 52.21(r)(6) and Minn. R. 7007.3000; Minn. R. 7007.0800, subp. 4 & 5
The Permittee shall monitor the actual emissions of any regulated NSR pollutant that could increase as a result of the project and that were analyzed using the ATPA test, and the potential emissions of any regulated NSR pollutant that could increase as a result of the project and that were analyzed using potential emissions. The Permittee shall calculate and maintain a record of the sum of the actual and potential (if used in the analysis) emissions of the regulated pollutant, in tons per year on a calendar year basis, for a period of 5 years following resumption of regular operations after the change, or for a period of 10 years following resumption of regular operations after the change if the project increases the design capacity of or potential to emit of any unit associated with the project.	Title I Condition: 40 CFR Section 52.21(r)(6) and Minn. R. 7007.3000; Minn. R. 7007.0800, subp. 4 & 5
The Permittee must submit a report to the Agency if the annual summed (actual plus potential, if applicable) emissions differ from the preconstruction projection and exceed the baseline actual emissions by a significant amount as listed at 40 CFR Section 52.21(b)(23). Such report shall be submitted to the Agency within 60 days after the end of the year in which the exceedances occur. The report shall contain: a. The name and ID number of the facility, and the name and telephone number of the facility contact person b. The annual emissions (actual plus potential, if any part of the project was analyzed using potential emissions) for each pollutant for which the preconstruction projection and significant emissions increase are exceeded. c. Any other information, such as an explanation as to why the summed emissions differ from the preconstruction projection.	Title I Condition: 40 CFR Section 52.21(r)(6) and Minn. R. 7007.3000; Minn. R. 7007.0800, subp. 4 & 5

Facility Name: Marvin Windows & Doors

Permit Number: 13500002 - 001

Subject Item: **GP 001 Wood Milling Equipment 1**

Associated Items:
CE 007 Fabric Filter - Low Temperature, i.e., T<180 Degrees F
CE 029 Centrifugal Collector - Medium Efficiency
CE 030 Centrifugal Collector - Medium Efficiency
CE 031 Centrifugal Collector - Medium Efficiency
EU 057 Grinder
EU 058 Multi-Rip
EU 059 Band Re-Saw
EU 060 Saw Cutoff
EU 062 Saw Cutoff
EU 063 Saw Cutoff
EU 064 Saw Cutoff
EU 068 Saw Cutoff
EU 069 Saw Cutoff
EU 070 Cutback Saw
EU 071 Hog-Mini
EU 072 Saw Cutoff
EU 073 Moulder
EU 076 Saw Cutoff
EU 077 Saw Scan
EU 078 Rerip Saw
EU 079 Chop Saw Chop
EU 114 Saw Table
EU 347 Saw Rip
EU 348 Saw Thin Cut
EU 358 Cleaner
EU 372 Saw Cutoff
EU 378 Saw Cutoff
EU 383 Saw Radial Arm
SV 001 Wood Milling Emissions

What to do	Why to do it
EMISSION AND OPERATIONAL LIMITS	hdr
Total Particulate Matter: less than or equal to 0.3 grains/dry standard cubic foot of exhaust gas unless required to further reduce emissions to comply with the less stringent limit of either Minn. R. 7011.0730 or Minn. R. 7011.0735.	Minn. R. 7011.0715, subp. 1(A)
Opacity: less than or equal to 20 percent opacity.	Minn. R. 7011.0715, subp. 1(B)
CONTROL EQUIPMENT - see also GP 022	hdr
The Permittee shall vent emissions from all units listed under this Group to control equipment meeting the requirements of GP 022 as specified in this permit. Equipment included in this Group are the Associated Items listed above as well as the equipment identified through the Recordkeeping of Equipment Changes requirement (see GP 022, Recordkeeping of Equipment Changes: ...).	Title I Condition: Limit to avoid classification as a modification under 40 CFR Section 52.21; Minn. R. 7007.3000
PERFORMANCE TESTING	hdr

TABLE A: LIMITS AND OTHER REQUIREMENTS

Facility Name: Marvin Windows & Doors

Permit Number: 13500002 - 001

Initial Performance Test: due 270 days after Permit Issuance to measure the Air Flow Rate (acfm) at the baghouse to be compared to the permitted Air Flow Rate (acfm) of the baghouse. The facility may use in-house methods to complete this requirement.	Minn. R. 7017.2020, subp. 1
Performance Test: due before end of each year following Initial Performance Test to measure the Air Flow Rate (acfm) at the baghouse to be compared to the permitted Air Flow Rate (acfm) of the baghouse. The facility may use in-house methods to complete this requirement.	Minn. R. 7017.2020, subp. 1

TABLE A: LIMITS AND OTHER REQUIREMENTS

Facility Name: Marvin Windows & Doors

Permit Number: 13500002 - 001

Subject Item: **GP 002 Wood Milling Equipment 2**

Associated Items: CE 001 Fabric Filter - Low Temperature, i.e., T<180 Degrees F

CE 032 Centrifugal Collector - Medium Efficiency

CE 033 Centrifugal Collector - Medium Efficiency

CE 034 Centrifugal Collector - Medium Efficiency

CE 035 Centrifugal Collector - Medium Efficiency

CE 036 Centrifugal Collector - Medium Efficiency

CE 037 Centrifugal Collector - Medium Efficiency

CE 038 Centrifugal Collector - Medium Efficiency

CE 039 Centrifugal Collector - Medium Efficiency

EU 081 Moulder

EU 082 Moulder

EU 083 Moulder

EU 084 Moulder

EU 085 Moulder

EU 087 Moulder

EU 088 Moulder

EU 089 Moulder

EU 090 Moulder

EU 092 D/E Tenoner

EU 093 Sander Belt

EU 094 Band Re-Saw

EU 095 Moulder

EU 131 D/E Tenoner

SV 002 Wood Milling Emissions

What to do	Why to do it
EMISSION AND OPERATIONAL LIMITS	hdr
Total Particulate Matter: less than or equal to 0.3 grains/dry standard cubic foot of exhaust gas unless required to further reduce emissions to comply with the less stringent limit of either Minn. R. 7011.0730 or Minn. R. 7011.0735.	Minn. R. 7011.0715, subp. 1(A)
Opacity: less than or equal to 20 percent opacity.	Minn. R. 7011.0715, subp. 1(B)
CONTROL EQUIPMENT - see also GP 022	hdr
The Permittee shall vent emissions from all units listed under this Group to control equipment meeting the requirements of GP 022 as specified in this permit. Equipment included in this Group are the Associated Items listed above as well as the equipment identified through the Recordkeeping of Equipment Changes requirement (see GP 022, Recordkeeping of Equipment Changes: ...).	Title I Condition: Limit to avoid classification as a modification under 40 CFR Section 52.21; Minn. R. 7007.3000
PERFORMANCE TESTING	hdr
Initial Performance Test: due 270 days after Permit Issuance to measure the Air Flow Rate (acfm) at the baghouse to be compared to the permitted Air Flow Rate (acfm) of the baghouse. The facility may use in-house methods to complete this requirement.	Minn. R. 7017.2020, subp. 1
Performance Test: due before end of each year following Initial Performance Test to measure the Air Flow Rate (acfm) at the baghouse to be compared to the permitted Air Flow Rate (acfm) of the baghouse. The facility may use in-house methods to complete this requirement.	Minn. R. 7017.2020, subp. 1

Facility Name: Marvin Windows & Doors

Permit Number: 13500002 - 001

Subject Item: **GP 003 Wood Milling Equipment 3**

Associated Items: CE 003 Fabric Filter - Low Temperature, i.e., T<180 Degrees F

CE 040 Centrifugal Collector - Medium Efficiency

CE 041 Centrifugal Collector - Medium Efficiency

CE 042 Centrifugal Collector - Medium Efficiency

EU 080 Chop Saw

EU 091 D/E Tenoner

EU 098 Saw Cutoff

EU 099 D/E Tenoner

EU 100 D/E Tenoner

EU 101 D/E Tenoner

EU 103 D/E Tenoner

EU 104 Drilling Machine

EU 105 Drilling Machine

EU 106 Shaper

EU 107 Linear Cutoff Saw

EU 108 Saw Radial Arm

EU 109 Saw Radial Arm

EU 110 Linear Cutoff Saw

EU 111 Saw Radial Arm

EU 113 Saw Radial Arm

EU 115 D/E Tenoner

EU 116 D/E Tenoner

EU 117 D/E Tenoner

EU 119 Band Saw

EU 120 D/E Tenoner

EU 370 Saw Cutoff

EU 377 Chop Saw

SV 003 Wood Milling Emissions

What to do	Why to do it
EMISSION AND OPERATIONAL LIMITS	hdr
Total Particulate Matter: less than or equal to 0.3 grains/dry standard cubic foot of exhaust gas unless required to further reduce emissions to comply with the less stringent limit of either Minn. R. 7011.0730 or Minn. R. 7011.0735.	Minn. R. 7011.0715, subp. 1(A)
Opacity: less than or equal to 20 percent opacity.	Minn. R. 7011.0715, subp. 1(B)
CONTROL EQUIPMENT - see also GP 022	hdr
The Permittee shall vent emissions from all units listed under this Group to control equipment meeting the requirements of GP 022 as specified in this permit. Equipment included in this Group are the Associated Items listed above as well as the equipment identified through the Recordkeeping of Equipment Changes requirement (see GP 022, Recordkeeping of Equipment Changes: ...).	Title I Condition: Limit to avoid classification as a modification under 40 CFR Section 52.21; Minn. R. 7007.3000
PERFORMANCE TESTING	hdr

TABLE A: LIMITS AND OTHER REQUIREMENTS

Facility Name: Marvin Windows & Doors

Permit Number: 13500002 - 001

Initial Performance Test: due 270 days after Permit Issuance to measure the Air Flow Rate (acfm) at the baghouse to be compared to the permitted Air Flow Rate (acfm) of the baghouse. The facility may use in-house methods to complete this requirement.	Minn. R. 7017.2020, subp. 1
Performance Test: due before end of each year following Initial Performance Test to measure the Air Flow Rate (acfm) at the baghouse to be compared to the permitted Air Flow Rate (acfm) of the baghouse. The facility may use in-house methods to complete this requirement.	Minn. R. 7017.2020, subp. 1

TABLE A: LIMITS AND OTHER REQUIREMENTS

Facility Name: Marvin Windows & Doors

Permit Number: 13500002 - 001

Subject Item: **GP 004 Wood Milling Equipment 4**

Associated Items: CE 005 Fabric Filter - Low Temperature, i.e., T<180 Degrees F

CE 023 Centrifugal Collector - Low Efficiency

CE 024 Centrifugal Collector - Medium Efficiency

CE 025 Centrifugal Collector - Medium Efficiency

EU 121 Saw Cutoff

EU 122 Saw Cutoff

EU 123 Saw Cutoff

EU 124 Finger Jointer

EU 125 Finger Jointer

EU 126 Finger Jointer

SV 004 Wood Milling Emissions

What to do	Why to do it
EMISSION AND OPERATIONAL LIMITS	hdr
Total Particulate Matter: less than or equal to 0.3 grains/dry standard cubic foot of exhaust gas unless required to further reduce emissions to comply with the less stringent limit of either Minn. R. 7011.0730 or Minn. R. 7011.0735.	Minn. R. 7011.0715, subp. 1(A)
Opacity: less than or equal to 20 percent opacity.	Minn. R. 7011.0715, subp. 1(B)
CONTROL EQUIPMENT - see also GP 022	hdr
The Permittee shall vent emissions from all units listed under this Group to control equipment meeting the requirements of GP 022 as specified in this permit. Equipment included in this Group are the Associated Items listed above as well as the equipment identified through the Recordkeeping of Equipment Changes requirement (see GP 022, Recordkeeping of Equipment Changes: ...).	Title I Condition: Limit to avoid classification as a modification under 40 CFR Section 52.21; Minn. R. 7007.3000
PERFORMANCE TESTING	hdr
Initial Performance Test: due 270 days after Permit Issuance to measure the Air Flow Rate (acfm) at the baghouse to be compared to the permitted Air Flow Rate (acfm) of the baghouse. The facility may use in-house methods to complete this requirement.	Minn. R. 7017.2020, subp. 1
Performance Test: due before end of each year following Initial Performance Test to measure the Air Flow Rate (acfm) at the baghouse to be compared to the permitted Air Flow Rate (acfm) of the baghouse. The facility may use in-house methods to complete this requirement.	Minn. R. 7017.2020, subp. 1

TABLE A: LIMITS AND OTHER REQUIREMENTS

Facility Name: Marvin Windows & Doors

Permit Number: 13500002 - 001

Subject Item: **GP 005 Wood Milling Equipment 5**

Associated Items: CE 009 Fabric Filter - Low Temperature, i.e., T<180 Degrees F

CE 026 Centrifugal Collector - Medium Efficiency

CE 027 Centrifugal Collector - Medium Efficiency

CE 028 Centrifugal Collector - Medium Efficiency

EU 127 Moulder

EU 128 Moulder

EU 129 Moulder

EU 130 D/E Tenoner

EU 132 D/E Tenoner

EU 319 D/E Tenoner

SV 005 Wood Milling Emissions

What to do	Why to do it
EMISSION AND OPERATIONAL LIMITS	hdr
Total Particulate Matter: less than or equal to 0.3 grains/dry standard cubic foot of exhaust gas unless required to further reduce emissions to comply with the less stringent limit of either Minn. R. 7011.0730 or Minn. R. 7011.0735.	Minn. R. 7011.0715, subp. 1(A)
Opacity: less than or equal to 20 percent opacity.	Minn. R. 7011.0715, subp. 1(B)
CONTROL EQUIPMENT - see also GP 022	hdr
The Permittee shall vent emissions from all units listed under this Group to control equipment meeting the requirements of GP 022 as specified in this permit. Equipment included in this Group are the Associated Items listed above as well as the equipment identified through the Recordkeeping of Equipment Changes requirement (see GP 022, Recordkeeping of Equipment Changes: ...).	Title I Condition: 40 CFR Section 52.21 and Minn. R. 7007.3000
PERFORMANCE TESTING	hdr
Initial Performance Test: due 270 days after Permit Issuance to measure the Air Flow Rate (acfm) at the baghouse to be compared to the permitted Air Flow Rate (acfm) of the baghouse. The facility may use in-house methods to complete this requirement.	Minn. R. 7017.2020, subp. 1
Performance Test: due before end of each year following Initial Performance Test to measure the Air Flow Rate (acfm) at the baghouse to be compared to the permitted Air Flow Rate (acfm) of the baghouse. The facility may use in-house methods to complete this requirement.	Minn. R. 7017.2020, subp. 1

Facility Name: Marvin Windows & Doors

Permit Number: 13500002 - 001

Subject Item: **GP 006 Wood Milling Equipment 6**

Associated Items: CE 019 Fabric Filter - Low Temperature, i.e., T<180 Degrees F

EU 096 Saw

EU 112 Saw Cutoff

EU 133 Single End

EU 134 Single End

EU 135 Saw Radial Arm

EU 136 Saw Radial Arm

EU 137 Saw Radial Arm

EU 138 Saw Cutoff

EU 139 Linear Cutoff Saw

EU 140 Saw

EU 141 Saw

EU 142 Single End

EU 143 CNC Router

EU 144 Saw

EU 145 Saw

EU 146 Router

EU 147 Single End

EU 148 Chop Saw

EU 149 Chop Saw

EU 150 Chop Saw

EU 319 D/E Tenoner

EU 329 Saw Chop

EU 332 Saw Radial Arm

EU 333 Saw Rerip

EU 351 Router

EU 376 Table Down Draft

SV 006 Wood Milling Emissions

What to do	Why to do it
EMISSION AND OPERATIONAL LIMITS	hdr
Total Particulate Matter: less than or equal to 0.3 grains/dry standard cubic foot of exhaust gas unless required to further reduce emissions to comply with the less stringent limit of either Minn. R. 7011.0730 or Minn. R. 7011.0735.	Minn. R. 7011.0715, subp. 1(A)
Opacity: less than or equal to 20 percent opacity.	Minn. R. 7011.0715, subp. 1(B)
CONTROL EQUIPMENT - see also GP 022	hdr
The Permittee shall vent emissions from all units listed under this Group to control equipment meeting the requirements of GP 022 as specified in this permit. Equipment included in this Group are the Associated Items listed above as well as the equipment identified through the Recordkeeping of Equipment Changes requirement (see GP 022, Recordkeeping of Equipment Changes: ...).	Title I Condition: Limit to avoid classification as a modification under 40 CFR Section 52.21; Minn. R. 7007.3000
PERFORMANCE TESTING	hdr

TABLE A: LIMITS AND OTHER REQUIREMENTS

Facility Name: Marvin Windows & Doors

Permit Number: 13500002 - 001

Initial Performance Test: due 270 days after Permit Issuance to measure the Air Flow Rate (acfm) at the baghouse to be compared to the permitted Air Flow Rate (acfm) of the baghouse. The facility may use in-house methods to complete this requirement.	Minn. R. 7017.2020, subp. 1
Performance Test: due before end of each year following Initial Performance Test to measure the Air Flow Rate (acfm) at the baghouse to be compared to the permitted Air Flow Rate (acfm) of the baghouse. The facility may use in-house methods to complete this requirement.	Minn. R. 7017.2020, subp. 1

Facility Name: Marvin Windows & Doors

Permit Number: 13500002 - 001

Subject Item: **GP 009 Wood Milling Equipment 9**

Associated Items: CE 020 Fabric Filter - Low Temperature, i.e., T<180 Degrees F

EU 151 Single End

EU 152 Single End

EU 153 Shaper

EU 154 Shaper

EU 155 Single End

EU 156 Planer

EU 157 Sander Belt

EU 158 Chop Saw

EU 159 Single End

EU 160 Chop Saw

EU 161 Moulder

EU 162 Moulder

EU 163 D/E Tenoner

EU 164 Router (CNC)

EU 165 Single End

EU 166 Single End

EU 168 Shaper

EU 169 Shaper

EU 170 Single End

EU 171 Shaper

EU 172 Saw Rip

EU 173 Saw

EU 174 Sander Belt

EU 175 Saw

EU 176 Router

EU 177 Saw

EU 178 Lockrouter/Single Dr

EU 179 Saw Radial Arm

EU 180 Saw Radial Arm

EU 182 Saw Radial Arm

EU 183 Saw Radial Arm

EU 184 Saw Radial Arm

EU 185 Saw Radial Arm

EU 186 Saw Radial Arm

EU 187 Saw Radial Arm

EU 188 Saw Radial Arm

EU 189 Saw Radial Arm

EU 190 Band Saw

Facility Name: Marvin Windows & Doors

Permit Number: 13500002 - 001

Associated Items:

EU 191 Band Saw

EU 192 Band Saw

EU 193 Band Saw

EU 194 Band Saw

EU 195 Band Saw

EU 196 Saw Table

EU 197 Saw Table

EU 198 Saw Table

EU 200 Saw Table

EU 201 Saw Table

EU 202 Saw Table

EU 203 Saw Table

EU 204 Saw Table

EU 205 Saw Table

EU 206 Single End

EU 208 Saw

EU 209 Shaper

EU 210 Shaper

EU 211 Shaper

EU 212 Shaper

EU 213 Shaper

EU 214 Shaper

EU 215 Shaper

EU 216 Shaper

EU 217 Shaper

EU 218 Shaper

EU 219 Shaper

EU 220 Shaper

EU 221 Shaper

EU 222 Shaper

EU 223 Shaper

EU 224 Shaper

EU 225 Shaper

EU 226 Shaper

EU 227 Shaper

EU 228 Shaper

EU 229 Shaper

EU 230 Shaper

EU 231 Shaper

EU 232 Shaper

Facility Name: Marvin Windows & Doors

Permit Number: 13500002 - 001

Associated Items:

EU 233 Shaper

EU 234 Shaper

EU 235 Router

EU 236 Shaper

EU 237 Shaper

EU 238 Planer

EU 239 Planer

EU 241 Sander Belt

EU 242 Sander Belt

EU 243 Sander Belt

EU 244 Sander Belt

EU 245 Sander Belt

EU 246 Sander Disc

EU 247 Sander Disc

EU 248 Sander Disc

EU 249 Sander Disc

EU 250 Sander Disc

EU 251 Sander Disc

EU 252 Sander Disc

EU 253 Sander Disc

EU 254 Sander Disc

EU 255 Sander Disc

EU 256 Sander Disc

EU 257 Chop Saw

EU 258 Shaper

EU 259 Router Table

EU 260 Router Table

EU 261 Router

EU 262 Router

EU 263 Saw Radial Arm

EU 264 Shaper

EU 265 Saw Shaper

EU 267 Saw Woodbead

EU 268 Saw Radial Arm

EU 269 Coper

EU 270 Band Saw

EU 271 Planer

EU 272 Sander Vertical

EU 273 Saw Radial Arm

EU 274 Single End

Facility Name: Marvin Windows & Doors

Permit Number: 13500002 - 001

Associated Items:

EU 275 Single End

EU 276 Saw Table

EU 277 Band Saw

EU 278 Sander Belt

EU 279 Mortiser

EU 280 Sander Disc

EU 281 Chop Saw

EU 282 Chop Saw

EU 283 Chop Saw

EU 284 Chop Saw

EU 285 Chop Saw

EU 286 Chop Saw

EU 287 Saw Radial Arm

EU 288 Chop Saw

EU 289 Router

EU 290 Router

EU 291 Chop Saw

EU 292 Chop Saw

EU 293 Shaper

EU 294 Chop Saw

EU 295 Chop Saw

EU 296 Chop Saw

EU 297 Router

EU 298 Chop Saw

EU 299 Router

EU 300 Router

EU 301 Router

EU 302 Router

EU 303 Router

EU 304 Router

EU 305 Router

EU 306 Chop Saw

EU 307 Chop Saw

EU 308 Chop Saw

EU 309 Chop Saw

EU 310 Router Table

EU 311 Chop Saw

EU 312 Chop Saw

EU 313 Sander Drum

EU 324 Slotter

Facility Name: Marvin Windows & Doors

Permit Number: 13500002 - 001

Associated Items:

EU 325 Sander Disc

EU 326 Saw Band

EU 327 Router

EU 328 Shaper

EU 331 Router

EU 334 Sander Disc

EU 335 Router Table

EU 336 Shaper

EU 337 Router

EU 338 Saw Radial Arm

EU 339 Planer

EU 340 Saw Band

EU 341 Slotter

EU 342 Router

EU 343 Shaper

EU 344 Table Work

EU 345 Shaper

EU 346 Saw Chop

EU 349 Router

EU 352 Saw Miter

EU 353 Saw Chop

EU 354 Sander Belt

EU 355 Saw Shop

EU 356 Saw Radial Arm

EU 357 Router

EU 359 Router

EU 360 Sander

EU 361 Router

EU 362 Planer

EU 363 Saw Miter

EU 364 Saw Miter

EU 365 Saw Miter

EU 366 Saw Miter

EU 367 Saw Miter

EU 368 Saw Miter

EU 369 Sander Belt

EU 373 Sander

EU 379 Table Saw

EU 380 Single End

EU 381 Sander

TABLE A: LIMITS AND OTHER REQUIREMENTS

Facility Name: Marvin Windows & Doors

Permit Number: 13500002 - 001

Associated Items: EU 384 Single End

SV 009 Wood Milling Emissions

What to do	Why to do it
EMISSION AND OPERATIONAL LIMITS	hdr
Total Particulate Matter: less than or equal to 0.3 grains/dry standard cubic foot of exhaust gas unless required to further reduce emissions to comply with the less stringent limit of either Minn. R. 7011.0730 or Minn. R. 7011.0735.	Minn. R. 7011.0715, subp. 1(A)
Opacity: less than or equal to 20 percent opacity.	Minn. R. 7011.0715, subp. 1(B)
CONTROL EQUIPMENT - see also GP 022	hdr
The Permittee shall vent emissions from all units listed under this Group to control equipment meeting the requirements of GP 022 as specified in this permit. Equipment included in this Group are the Associated Items listed above as well as the equipment identified through the Recordkeeping of Equipment Changes requirement (see GP 022, Recordkeeping of Equipment Changes: ...).	Title I Condition: Limit to avoid classification as a modification under 40 CFR Section 52.21; Minn. R. 7007.3000
PERFORMANCE TESTING	hdr
Initial Performance Test: due 270 days after Permit Issuance to measure the Air Flow Rate (acfm) at the baghouse to be compared to the permitted Air Flow Rate (acfm) of the baghouse. The facility may use in-house methods to complete this requirement.	Minn. R. 7017.2020, subp. 1
Performance Test: due before end of each year following Initial Performance Test to measure the Air Flow Rate (acfm) at the baghouse to be compared to the permitted Air Flow Rate (acfm) of the baghouse. The facility may use in-house methods to complete this requirement.	Minn. R. 7017.2020, subp. 1

TABLE A: LIMITS AND OTHER REQUIREMENTS

Facility Name: Marvin Windows & Doors

Permit Number: 13500002 - 001

Subject Item: **GP 011 Wood Milling Equipment 11**

Associated Items: CE 021 Fabric Filter - Low Temperature, i.e., T<180 Degrees F

EU 314 Tub Grinder 1

EU 315 Tub Grinder 2

EU 316 Vortex Grinder

SV 011 Wood Milling Emissions

What to do	Why to do it
EMISSION AND OPERATIONAL LIMITS	hdr
Total Particulate Matter: less than or equal to 0.3 grains/dry standard cubic foot of exhaust gas unless required to further reduce emissions to comply with the less stringent limit of either Minn. R. 7011.0730 or Minn. R. 7011.0735.	Minn. R. 7011.0715, subp. 1(A)
Opacity: less than or equal to 20 percent opacity.	Minn. R. 7011.0715, subp. 1(B)
CONTROL EQUIPMENT - see also GP 022	hdr
The Permittee shall vent emissions from all units listed under this Group to control equipment meeting the requirements of GP 022 as specified in this permit. Equipment included in this Group are the Associated Items listed above as well as the equipment identified through the Recordkeeping of Equipment Changes requirement (see GP 022, Recordkeeping of Equipment Changes: ...).	Title I Condition: Limit to avoid classification as a modification under 40 CFR Section 52.21; Minn. R. 7007.3000
PERFORMANCE TESTING	hdr
Initial Performance Test: due 270 days after Permit Issuance to measure the Air Flow Rate (acfm) at the baghouse to be compared to the permitted Air Flow Rate (acfm) of the baghouse. The facility may use in-house methods to complete this requirement.	Minn. R. 7017.2020, subp. 1
Performance Test: due before end of each year following Initial Performance Test to measure the Air Flow Rate (acfm) at the baghouse to be compared to the permitted Air Flow Rate (acfm) of the baghouse. The facility may use in-house methods to complete this requirement.	Minn. R. 7017.2020, subp. 1

TABLE A: LIMITS AND OTHER REQUIREMENTS

Facility Name: Marvin Windows & Doors

Permit Number: 13500002 - 001

Subject Item: **GP 012 Boilers 5 & 6**

Associated Items: CE 017 Electrostatic Precipitator - High Efficiency

CE 043 Centrifugal Collector - Medium Efficiency

CE 044 Centrifugal Collector - Medium Efficiency

EU 014 Boiler 5 Wood Fired

EU 015 Boiler 6 Wood Fired

SV 027 Boiler 5 & 6 Exhaust

SV 028 Boiler 5 & 6 Exhaust Bypass

What to do	Why to do it
LIMITS	hdr
Total Particulate Matter: less than or equal to 0.1 lbs/million Btu heat input using 3-hour Average (emissions).	Title I Condition: 40 CFR Section 52.21 and Minn. R. 7007.3000 [most stringent, meets the limits set by Minn. R. 7011.0515, subp. 1]
Particulate Matter < 10 micron: less than or equal to 0.1 lbs/million Btu heat input using 3-hour Average (emissions).	Title I Condition: 40 CFR Section 52.21 and Minn. R. 7007.3000
Opacity: less than or equal to 20 percent opacity except for one six-minute period per hour of not more than 60 percent opacity.	Minn. R. 7011.0515, subp. 2
The Permittee shall operate and maintain the control equipment such that it achieves an overall control efficiency for Total Particulate Matter: Total Particulate Matter: greater than or equal to 76 percent control efficiency	Title I Condition: 40 CFR Section 52.21, Minn. R. 7007.3000, Minn. R. 7007.0800, subp. 2 and 14
The Permittee shall operate and maintain the control equipment such that it achieves an overall control efficiency for Total Particulate Matter<10 micron: Particulate Matter < 10 micron: greater than or equal to 73.5 percent control efficiency	Title I Condition: 40 CFR Section 52.21, Minn. R. 7007.3000, Minn. R. 7007.0800, subp. 2 and 14
Visible Emissions: The Permittee shall check the stacks for any visible emissions once each day of operation during daylight hours.	Minn. R. 7007.0800, subp. 2
Number of Fields Online: greater than or equal to 2 fields online for CE017, unless a new minimum is set pursuant to Minn. R. 7017.2025, subp. 3, based on the values recorded during the most recent MPCA approved performance test where compliance was demonstrated.	Minn. R. 7007.0800, subp. 2 and 14
OPERATIONAL REQUIREMENTS	hdr
Allowed Fuels: The Permittee shall burn only wood, as defined in Minn. R. 7011.1201, subp. 48, in GP012.	Minn. R. 7007.0800, subp. 2
The Permittee shall operate and maintain CE017, CE043 and CE044 in accordance with the Operation and Maintenance (O&M) Plan. The Permittee shall keep copies of the O&M Plan available onsite for use by staff and MPCA staff.	Minn. R. 7007.0800, subp. 14
The Permittee shall operate and maintain the centrifugal collectors and electrostatic precipitator at all times that any emission unit controlled by the equipment is in operation.	Minn. R. 7007.0800, subp. 2 and 14
MONITORING REQUIREMENTS	hdr
Monitoring Equipment: The Permittee shall install and maintain the necessary monitoring equipment for measuring and recording the number of field online as required by this permit. The monitoring equipment must be installed, in use, and properly maintained when the monitored electrostatic precipitator is in operation.	Minn. R. 7007.0800, subp. 4
Periodic Inspections: At least once per calendar quarter, or more frequently as required by the manufacturing specifications, the Permittee shall inspect the control equipment components. The Permittee shall maintain a written or electronic record of these inspections.	Minn. R. 7007.0800, subp. 4, 5 and 14
PERFORMANCE TESTING	hdr
Performance Test: due before end of each 60 months following Permit Issuance to measure PM and PM10 emissions from GP012.	Title I Condition: Performance testing for limit under 40 CFR Section 52.21 and Minn. R. 7007.3000; Minn. R. 7017.2020, subp. 1
RECORDKEEPING	hdr
By the 15th of each month, the Permittee shall record and maintain the quanity of fuel used at GP012 for the previous month calculated from boiler water use. Permittee shall only burn wood and woodwaste.	Minn. R. 7007.0800, subp. 4 and 5

Facility Name: Marvin Windows & Doors

Permit Number: 13500002 - 001

Recordkeeping of Visible Emissions. The Permittee shall record the time and date of each visible emission inspection and whether or not any visible emissions were observed.	Minn. R. 7007.0800, subp. 2 and 14
Recordkeeping of Number of Fields Online: The Permittee shall record the time and date of each number of fields online reading and whether or not the recorded number was equal to or greater than the minimum value specified in this permit.	Minn. R. 7007.0800, subp. 4 and 5
Corrective Actions: If the electrostatic precipitator or any of its components are found during the inspections to need repair, the Permittee shall take corrective action as soon as possible. Corrective actions shall include completion of necessary repairs identified during the inspection, as applicable. Corrective actions include, but are not limited to, those outlined in the O & M Plan. The Permittee shall keep a written or electronic record of the type and date of any corrective action taken for the electrostatic precipitator.	Minn. R. 7007.0800, subp. 4, 5 and 14
Corrective Actions: If the centrifugal collectors or any of their components are found during the inspections to need repair, the Permittee shall take corrective action as soon as possible. Corrective actions shall include completion of necessary repairs identified during the inspection, as applicable. Corrective actions include, but are not limited to, those outlined in the O & M Plan. The Permittee shall keep a written or electronic record of the type and date of any corrective action taken for each centrifugal collector.	Minn. R. 7007.0800, subp. 4, 5 and 14

TABLE A: LIMITS AND OTHER REQUIREMENTS

Facility Name: Marvin Windows & Doors

Permit Number: 13500002 - 001

Subject Item: **GP 013 Primer Ovens**

Associated Items: EU 042 Wood Bead Primer#1/Munt Primers Oven

EU 046 P2 Prime Line 2 Oven

EU 048 3 Stage Fan Coater Oven

EU 322 P2 Prime Line 3 Oven

SV 019 Paint Emissions

SV 021 Paint Emissions

SV 022 Paint Emissions

SV 044 Paint Emissions

What to do	Why to do it
LIMITS	hdr
Total Particulate Matter: less than or equal to 0.3 grains/dry standard cubic foot of exhaust gas unless required to further reduce emissions to comply with the less stringent limit of either Minn. R. 7011.0730 or Minn. R. 7011. 0735.	Minn. R. 7011.0715, subp. 1(A)
Opacity: less than or equal to 20 percent opacity	Minn. R. 7011.0715, subp. 1(B)

TABLE A: LIMITS AND OTHER REQUIREMENTS

Facility Name: Marvin Windows & Doors

Permit Number: 13500002 - 001

Subject Item: **GP 014 Diesel Engines I**

Associated Items: EU 016 Diesel Generator - South Bldg

EU 017 Diesel Generator - South Bldg

EU 018 Diesel Generator - Bldg 3A

EU 019 Diesel Generator - Bldg 6

EU 020 Diesel Generator - Boiler House

EU 021 Diesel Generator - Boiler House

EU 022 Diesel Generator - Boiler House

EU 023 Diesel Generator - COB Bldg

SV 029 Diesel Generator Exhaust

SV 030 Diesel Generator Exhaust

SV 031 Diesel Generator Exhaust

SV 032 Diesel Generator Exhaust

SV 033 Diesel Generator Exhaust

SV 034 Diesel Generator Exhaust

SV 035 Diesel Generator Exhaust

SV 036 Diesel Generator Exhaust

SV 037 Diesel Generator Exhaust

What to do	Why to do it
The following requirements of this group apply to each item listed under the group.	Minn. R. 7007.0800, subp. 2
LIMITS	hdr
Fuel Type: Diesel fuel only by design.	Minn. R. 7005.0100, subp. 35a
Operating Hours: less than or equal to 600 hours/year using 12-month Rolling Sum to be calculated monthly by the 15th day of the month for the previous 12 months.	Title I Condition: 40 CFR Section 52.21 and Minn. R. 7007.3000
Sulfur Dioxide: less than or equal to 0.5 lbs/million Btu heat input (the potential to emit calculations are based on 0.2 lbs/million BTU heat input)	Minn. R. 7011.2300, subp. 2
Opacity: less than or equal to 20 percent once operating temperatures have been attained.	Minn. R. 7011.2300, subp. 1
MONITORING	hdr
Hours of Operating Monitoring: The Permittee shall maintain and operate an hours meter on the generator and shall record the hours of operation on the first day of each calendar month for the previous calendar month.	Minn. R. 7007.0800, subp. 4 and 5
RECORDKEEPING	hdr
Monthly Hours of Operation Calculation: By the 15th day of the month, the Permittee shall calculate and record the 12-month Rolling Sum hours of operation for the previous 12-month period by summing the monthly hours data for the previous 12 months.	Minn. R. 7007.0800, subp. 4 and 5

TABLE A: LIMITS AND OTHER REQUIREMENTS

Facility Name: Marvin Windows & Doors

Permit Number: 13500002 - 001

Subject Item: **GP 015 Diesel Engines II**

Associated Items: EU 024 Diesel Generator - North Bldg

EU 025 Diesel Generator - North Bldg

SV 038 Diesel Generator Exhaust

SV 039 Diesel Generator Exhaust

What to do	Why to do it
The following requirements of this group apply to each item listed under the group.	Minn. R. 7007.0800, subp. 2
LIMITS	hdr
Fuel Type: Diesel fuel only by design.	Minn. R. 7005.0100, subp. 35a
Operating Hours: less than or equal to 600 hours/year using 12-month Rolling Sum to be calculated monthly by the 15th day of the month for the previous 12 months.	Title I Condition: to avoid classification as a major modification under 40 CFR Section 52.21
Sulfur Dioxide: less than or equal to 0.5 lbs/million Btu heat input (the potential to emit calculations are based on 0.2 lbs/million BTU heat input)	Minn. R. 7011.2300, subp. 2
Opacity: less than or equal to 20 percent once operating temperatures have been attained.	Minn. R. 7011.2300, subp. 1
MONITORING	hdr
Hours of Operating Monitoring: The Permittee shall maintain and operate an hours meter on the generator and shall record the hours of operation on the first day of each calendar month for the previous calendar month.	Minn. R. 7007.0800, subp. 4 and 5
RECORDKEEPING	hdr
Monthly Hours of Operation Calculation: By the 15th day of the month, the Permittee shall calculate and record the 12-month Rolling Sum hours of operation for the previous 12-month period by summing the monthly hours data for the previous 12 months.	Minn. R. 7007.0800, subp. 4 and 5

TABLE A: LIMITS AND OTHER REQUIREMENTS

Facility Name: Marvin Windows & Doors

Permit Number: 13500002 - 001

Subject Item: **GP 016 Diesel Engines III**

Associated Items: EU 026 Diesel Generator - Bldg 2

EU 027 Diesel Generator - Bldg 7

EU 031 Fire Pump Engine

SV 040 Diesel Generator Exhaust

SV 041 Diesel Generator Exhaust

SV 042 Fire Pump Engine Exhaust

What to do	Why to do it
The following requirements of this group apply to each item listed under the group.	Minn. R. 7007.0800, subp. 2
LIMITS	hdr
Fuel Type: Diesel fuel only by design.	Minn. R. 7005.0100, subp. 35a
Operating Hours: less than or equal to 600 hours/year using 12-month Rolling Sum to be calculated monthly by the 15th day of the month for the previous 12 months.	Minn. R. 7007.0800, subp. 2
Sulfur Dioxide: less than or equal to 0.5 lbs/million Btu heat input (the potential to emit calculations are based on 0.2 lbs/million BTU heat input)	Minn. R. 7011.2300, subp. 2
Opacity: less than or equal to 20 percent once operating temperatures have been attained.	Minn. R. 7011.2300, subp. 1
MONITORING	hdr
Hours of Operating Monitoring: The Permittee shall maintain and operate an hours meter on the generator and shall record the hours of operation on the first day of each calendar month for the previous calendar month.	Minn. R. 7007.0800, subp. 4 and 5
RECORDKEEPING	hdr
Monthly Hours of Operation Calculation: By the 15th day of the month, the Permittee shall calculate and record the 12-month Rolling Sum hours of operation for the previous 12-month period by summing the monthly hours data for the previous 12 months.	Minn. R. 7007.0800, subp. 4 and 5

TABLE A: LIMITS AND OTHER REQUIREMENTS

Facility Name: Marvin Windows & Doors

Permit Number: 13500002 - 001

Subject Item: **GP 017 Wood Treatment Usage Limits 1**

Associated Items: EU 035 KD Dip System

EU 037 Departmental Dip Containers

SV 007 Wood Treat System(s) Emissions

SV 008 Wood Treat System(s) Emissions

SV 015 Bypass for KD Dip System

SV 045 General Ventilator assigned to Dept Dip, Hand Priming & Misc VOC, since these don't have specific stacks

What to do	Why to do it
LIMITS	hdr
Usage of wood preservative mixture for EU035 and EU037 shall be less than or equal to 182 tons VOC/year using 365-day Rolling Sum following the calculation procedures specified in Appendix I.	Title I Condition: Limit to avoid major modification under 40 CFR Section 52.21 and Minn. R. 7007.3000
MONITORING	hdr
Daily Calculations - Wood Preservative Usage. By the end of each calendar day, the Permittee shall calculate and record the wood preservative usage 365-day Rolling Sum by summing the daily wood preservative usage data for the previous 365 days. The 365-day rolling sum shall be expressed in tons of VOC.	Title I Condition: Monitoring for limit to avoid major modification under 40 CFR Section 52.21 and Minn. R. 7007.3000
CONTROL EQUIPMENT - see also CE 011	hdr
The activated carbon adsorption (CE 011) shall be operated at all times when EU 035 is in operation (this requirement does not apply to EU 037). See CE 011 for activated carbon adsorption requirements.	Title I Condition: Limit to avoid major modification under 40 CFR Section 52.21 and Minn. R. 7007.3000

TABLE A: LIMITS AND OTHER REQUIREMENTS

Facility Name: Marvin Windows & Doors

Permit Number: 13500002 - 001

Subject Item: **GP 018 Wood Treatment Usage Limits 2**

Associated Items: EU 036 Dip Dry System

EU 039 Round Tops Dip System

SV 007 Wood Treat System(s) Emissions

SV 008 Wood Treat System(s) Emissions

SV 012 Bypass for Dip Dry System

SV 013 Round Tops Bypass

SV 014 Round Tops Bypass

What to do	Why to do it
LIMITS	hdr
Usage of wood preservative mixture for EU036 and EU039 shall be less than or equal to 687 tons VOC/year using 365-day Rolling Sum following the calculation procedures specified in Appendix I.	Title I Condition: 40 CFR Section 52.21 and Minn. R. 7007.3000
MONITORING	hdr
Daily Calculations - Wood Preservative Usage. By the end of each calendar day, the Permittee shall calculate and record the wood preservative usage 365-day Rolling Sum by summing the daily wood preservative usage data for the previous 365 days. The 365-day rolling sum shall be expressed in tons of VOC.	Title I Condition: 40 CFR Section 52.21 and Minn. R. 7007.3000
CONTROL EQUIPMENT - see also CE 011	hdr
The activated carbon adsorption (CE 011) shall be operated at all times when the emission unit is in operation. See CE 011 for activated carbon adsorption requirements.	Title I Condition: 40 CFR Section 52.21; Minn. R. 7007.3000; and Minn. R. 7007.0800, subp. 2 and 14

TABLE A: LIMITS AND OTHER REQUIREMENTS

Facility Name: Marvin Windows & Doors

Permit Number: 13500002 - 001

Subject Item: **GP 019 Wood Treatment VOC Limits**

Associated Items: CE 011 Activated Carbon Adsorption

EU 036 Dip Dry System

EU 039 Round Tops Dip System

SV 007 Wood Treat System(s) Emissions

SV 008 Wood Treat System(s) Emissions

SV 012 Bypass for Dip Dry System

SV 013 Round Tops Bypass

SV 014 Round Tops Bypass

What to do	Why to do it
LIMITS	dr
Volatile Organic Compounds: less than 19.6 lbs/hour using 3-hour Average This limit applies to captured and controlled emissions from EU036 and EU039.	Title I Condition: 40 CFR Section 52.21 and Minn. R. 7007.3000
CONTROL EQUIPMENT - see also CE 011	hdr
The activated carbon adsorption (CE 011) shall be operated at all times when the emission unit is in operation. See CE 011 for activated carbon adsorption requirements.	Title I Condition: 40 CFR Section 52.21; Minn. R. 7007.3000; and Minn. R. 7007.0800, subp. 2 and 14

TABLE A: LIMITS AND OTHER REQUIREMENTS

Facility Name: Marvin Windows & Doors

Permit Number: 13500002 - 001

Subject Item: **GP 020 Performance Testing Requirements for Baghouse Emission Points**

Associated Items: SV 001 Wood Milling Emissions

SV 002 Wood Milling Emissions

SV 003 Wood Milling Emissions

SV 004 Wood Milling Emissions

SV 005 Wood Milling Emissions

SV 006 Wood Milling Emissions

SV 009 Wood Milling Emissions

SV 011 Wood Milling Emissions

SV 046 Wood Milling Emissions

What to do	Why to do it
PERFORMANCE TESTING	hdr
The permittee is to annually test a control device from this group for one of the baghouse stack vent (SV) emission points listed as an associated item under this group (GP 020). MPCA stack test staff will review and assess which emission point is to be tested for each round of testing. See Group 022 and the associated CE for additional requirements.	Minn. R. 7007.0800, subp. 2
Initial Performance Test: due 270 days after Permit Issuance, to measure emissions of the control device being tested compared to the associated PM emission limit and to measure the Air Flow Rate (acfm - Exhaust Flow Capacity) at the baghouse outlet to be compared to the permitted Air Flow Rate (acfm - Exhaust Flow Capacity) of the baghouse.	Minn. R. 7017.2020, subp. 1
Performance Test: due before end of each year following Initial Performance Test, to measure emissions of the control device being tested compared to the associated PM emission limit and to measure the Air Flow Rate (acfm - Exhaust Flow Capacity) at the baghouse outlet to be compared to the permitted Air Flow Rate (acfm - Exhaust Flow Capacity) of the baghouse.	Minn. R. 7017.2020, subp. 1
Initial Performance Test: due 270 days after Permit Issuance, to measure emissions of the control device being tested compared to the associated PM-10 emission limit and to measure the Air Flow Rate (acfm - Exhaust Flow Capacity) at the baghouse outlet to be compared to the permitted Air Flow Rate (acfm - Exhaust Flow Capacity) of the baghouse.	Minn. R. 7017.2020, subp. 1
Performance Test: due before end of each year following Initial Performance Test, to measure emissions of the control device being tested compared to the associated PM-10 emission limit and to measure the Air Flow Rate (acfm - Exhaust Flow Capacity) at the baghouse outlet to be compared to the permitted Air Flow Rate (acfm - Exhaust Flow Capacity) of the baghouse.	Minn. R. 7017.2020, subp. 1

TABLE A: LIMITS AND OTHER REQUIREMENTS

Facility Name: Marvin Windows & Doors

Permit Number: 13500002 - 001

Subject Item: **GP 021 Wood Milling Equipment 12**

Associated Items: CE 059 Centrifugal Collector - Medium Efficiency

CE 060 Fabric Filter - Low Temperature, i.e., T<180 Degrees F

EU 374 D/E Tenoner

EU 375 Moulder

SV 046 Wood Milling Emissions

What to do	Why to do it
EMISSION AND OPERATIONAL LIMITS	hdr
Total Particulate Matter: less than or equal to 0.3 grains/dry standard cubic foot of exhaust gas unless required to further reduce emissions to comply with the less stringent limit of either Minn. R. 7011.0730 or Minn. R. 7011.0735.	Minn. R. 7011.0715, subp. 1(A)
Opacity: less than or equal to 20 percent opacity.	Minn. R. 7011.0715, subp. 1(B)
CONTROL EQUIPMENT - see also GP 022	hdr
The Permittee shall vent emissions from all units listed under this Group to control equipment meeting the requirements of GP 022 as specified in this permit. Equipment included in this Group are the Associated Items listed above as well as the equipment identified through the Recordkeeping of Equipment Changes requirement (see GP 022, Recordkeeping of Equipment Changes: ...).	Title I Condition: Limit to avoid classification as a modification under 40 CFR Section 52.21; Minn. R. 7007.3000
PERFORMANCE TESTING	hdr
Initial Performance Test: due 270 days after Permit Issuance to measure the Air Flow Rate (acfm) at the baghouse to be compared to the permitted Air Flow Rate (acfm) of the baghouse. The facility may use in-house methods to complete this requirement.	Minn. R. 7017.2020, subp. 1
Performance Test: due before end of each year following Initial Performance Test to measure the Air Flow Rate (acfm) at the baghouse to be compared to the permitted Air Flow Rate (acfm) of the baghouse. The facility may use in-house methods to complete this requirement.	Minn. R. 7017.2020, subp. 1

TABLE A: LIMITS AND OTHER REQUIREMENTS

Facility Name: Marvin Windows & Doors

Permit Number: 13500002 - 001

Subject Item: **GP 022 Control Equipment: Fabric Filters**

Associated Items: CE 001 Fabric Filter - Low Temperature, i.e., T<180 Degrees F

CE 003 Fabric Filter - Low Temperature, i.e., T<180 Degrees F

CE 005 Fabric Filter - Low Temperature, i.e., T<180 Degrees F

CE 007 Fabric Filter - Low Temperature, i.e., T<180 Degrees F

CE 009 Fabric Filter - Low Temperature, i.e., T<180 Degrees F

CE 019 Fabric Filter - Low Temperature, i.e., T<180 Degrees F

CE 020 Fabric Filter - Low Temperature, i.e., T<180 Degrees F

CE 021 Fabric Filter - Low Temperature, i.e., T<180 Degrees F

CE 060 Fabric Filter - Low Temperature, i.e., T<180 Degrees F

What to do	Why to do it
The following requirements of this group apply to each item listed under the group.	Minn. R. 7007.0800, subp. 2
LIMITS	hdr
Total Particulate Matter: less than or equal to 0.002 grains/dry standard cubic foot using 3-hour Average .	Title I Condition: 40 CFR Section 52.21, Minn. R. 7007.3000, and limit to avoid classification as a major modification under 40 CFR Section 52.21 [most stringent meets the limits set by Minn. R. 7011.0715, subp. 1(A)]
Particulate Matter < 10 micron: less than or equal to 0.002 grains/dry standard cubic foot using 3-hour Average .	Title I Condition: 40 CFR Section 52.21, Minn. R. 7007.3000, and limit to avoid classification as a major modification under 40 CFR Section 52.21
Total Particulate Matter: less than or equal to 0.3 grains/dry standard cubic foot of exhaust gas unless required to further reduce emissions to comply with the less stringent limit of either Minn. R. 7011.0730 or Minn. R. 7011.0735.	Minn. R. 7011.0715, subp. 1(A)
Opacity: less than or equal to 20 percent opacity	Minn. R. 7011.0715, subp. 1(B)
The Permittee shall operate and maintain the control equipment such that it achieves an overall control efficiency for Total Particulate Matter: greater than or equal to 99 percent	Title I Condition: 40 CFR Section 52.21; Minn. R. 7007.0800, subp. 2 and 14
The Permittee shall operate and maintain the control equipment such that it achieves an overall control efficiency greater for Particulate Matter < 10 micron: greater than or equal to 99 percent	Title I Condition: 40 CFR Section 52.21; Minn. R. 7007.0800, subp. 2 and 14
Pressure Drop: greater than or equal to 0.05 inches of water column and less than or equal to 10 inches of water column when operating emission units controlled by CE001. The Permittee shall record the pressure drop once every 24 hours when in operation.	Title I Condition: 40 CFR Section 52.21; Minn. R. 7007.0800, subp. 2 and 14
OPERATIONAL REQUIREMENTS	hdr
Operation of the control equipment is federally enforceable for replaced, new and/or modified wood milling equipment and may be considered when determining permitting applicability for such changes.	Title I Condition: Limit to avoid classification as a modification under 40 CFR Section 52.21; Minn. R. 7007.3000
The Permittee shall operate and maintain the fabric filter in accordance with the Operation and Maintenance (O & M) Plan. The Permittee shall keep copies of the O & M Plan available onsite for use by staff and MPCA staff.	Minn. R. 7007.0800, subp. 14
Permittee shall maintain written or electronic records of blower capacity.	Minn. R. 7007.0800, subp. 5
The Permittee shall operate and maintain the fabric filter at all times that any emission unit controlled by the fabric filter is in operation.	Title I Condition: 40 CFR Section 52.21; Minn. R. 7007.0800, subp. 2 and 14
MONITORING	hdr
Monitoring Equipment: The Permittee shall install and maintain the necessary monitoring equipment for measuring and recording pressure drop as required by this permit. The monitoring equipment must be installed, in use, and properly maintained when the monitored fabric filter is in operation.	Minn. R. 7007.0800, subp. 4
Periodic Inspections: At least once per calendar quarter, or more frequently as required by the manufacturing specifications, the Permittee shall inspect the control equipment components. The Permittee shall maintain a written or electronic record of these inspections.	Minn. R. 7007.0800, subp. 4, 5 and 14
RECORDKEEPING	hdr

Facility Name: Marvin Windows & Doors

Permit Number: 13500002 - 001

Recordkeeping of Equipment Changes: The Permittee shall keep and maintain a list of equipment vented to each baghouse and the airflows for each piece of equipment and the air flow capacity of each blower. The record shall show that the total airflow capacity of the blowers connected to a baghouse system are less than the limits given in Table A of this permit, listed at CE 001, CE 003, CE 005, CE007, CE 009, CE 019, CE 020, CE 021 and CE 060. This list shall be updated each time a change is made. The record shall include the date the change was made, a brief description of the equipment, the airflow for each piece of equipment, the CE (control equipment) number of the baghouse where the unit will be vented, the airflow capacity of each blower, the total air flow capacity of the blowers connected to each baghouse and any other information required on MPCA form GI-05B.	Title I Condition: Limit to avoid classification as a modification under40 CFR Section 52.21; Minn. R. 7007.3000
Permittee shall maintain written or electronic records of baghouse maintenance and any corrective actions taken as a result of maintenance.	Minn. R. 7007.0800, subp. 5
Recordkeeping of Pressure Drop. The Permittee shall record the time and date of each pressure drop reading and whether or not the recorded pressure drop was within the range specified in this permit.	Title I Condition: 40 CFR Section 52.21; Minn. R. 7007.0800, subp. 4 and 5
Corrective Actions: The Permittee shall take corrective action as soon as possible if any of the following occur: - the recorded pressure drop is outside the required operating range; or - the fabric filter or any of its components are found during the inspections to need repair. Corrective actions shall return the pressure drop to within the permitted range, and/or include completion of necessary repairs identified during the inspection, as applicable. Corrective actions include, but are not limited to, those outlined in the O & M Plan for the fabric filter. The Permittee shall keep a written or electronic record of the type and date of any corrective action taken for each filter.	Minn. R. 7007.0800, subp. 4, 5, and 14

TABLE A: LIMITS AND OTHER REQUIREMENTS

Facility Name: Marvin Windows & Doors

Permit Number: 13500002 - 001

Subject Item: **SV 018 Paint Emissions**

Associated Items: EU 010 Magna Spray Booth

What to do	Why to do it
PERFORMANCE TESTING (See EU 010 for emission limits)	hdr
Initial Performance Test: due 270 days after Permit Issuance, to measure PM emissions.	Minn. R. 7017.2020, subp. 1
Initial Performance Test: due 270 days after Permit Issuance, to measure PM-10 emissions.	Minn. R. 7017.2020, subp. 1

TABLE A: LIMITS AND OTHER REQUIREMENTS

Facility Name: Marvin Windows & Doors

Permit Number: 13500002 - 001

Subject Item: **EU 010 Magna Spray Booth**

Associated Items: CE 012 Other

CE 050 Other

SV 018 Paint Emissions

What to do	Why to do it
LIMITS	hdr
Volatile Organic Compounds: less than or equal to 30 tons/year using 365-day Rolling Sum (usage).	Title I Condition: 40 CFR Section 52.21 and Minn. R. 7007.3000
Volatile Organic Compounds: less than or equal to 35.4 lbs/hour using 3-hour Average (usage).	Title I Condition: 40 CFR Section 52.21 and Minn. R. 7007.3000
Total Particulate Matter: less than or equal to 0.18 lbs/hour using 3-hour Average (emissions)	Title I Condition: 40 CFR Section 52.21 and Minn. R. 7007.3000
Particulate Matter < 10 micron: less than or equal to 0.18 lbs/hour using 3-hour Average (emissions)	Title I Condition: 40 CFR Section 52.21 and Minn. R. 7007.3000
Total Particulate Matter: less than or equal to 0.3 grains/dry standard cubic foot of exhaust gas unless required to further reduce emissions to comply with the less stringent limit of either Minn. R. 7011.0730 or Minn. R. 7011.0735.	Minn. R. 7011.0715, subp. 1(A)
Opacity: less than or equal to 20 percent opacity	Minn. R. 7011.0715, subp. 1(B)
B. MONITORING	hdr
Daily Inspections: Once each operating day, the Permittee shall visually inspect the condition of each panel filter with respect to alignment, saturation, tears, holes and any other condition that may affect the filter's performance. The Permittee shall maintain a daily written or electronic record of filter inspections.	Title I Condition: Monitoring for limit under 40 CFR Section 52.21 and Minn. R. 7007.3000, Minn. R. 7007.0800, subp. 5
Periodic Inspections: At least once per calendar quarter, or more frequently as required by the manufacturing specifications, the Permittee shall inspect the control equipment components. The Permittee shall maintain a written or electronic record of these inspections.	Minn. R. 7007.0800, subp. 4, 5 and 14
OPERATIONAL REQUIREMENTS	hdr
The Permittee shall operate and maintain the control equipment such that it achieves an overall control efficiency for Total Particulate Matter: greater than or equal to 97.75 percent	Title I Condition: 40 CFR Section 52.21 and Minn. R. 7007.3000
The Permittee shall operate and maintain the control equipment such that it achieves an overall control efficiency for Particulate Matter < 10 micron: greater than or equal to 97.75 percent	Title I Condition: 40 CFR Section 52.21 and Minn. R. 7007.3000
The Permittee shall operate and maintain the panel filters any time that any process equipment controlled by the panel filters is in operation.	Title I Condition: 40 CFR Section 52.21 and Minn. R. 7007.3000
Operation and Maintenance of Filters: The Permittee shall operate and maintain each filter in accordance with the Operation and Maintenance (O & M) Plan. The Permittee shall keep copies of the O & M Plan available onsite for use by staff and MPCA staff.	Title I Condition: 40 CFR Section 52.21, Minn. R. 7007.3000 and Minn. R. 7007.0800, subp. 14
BACT Work Practice Requirements: The following work practices and standards shall be implemented and/or maintained by the Permittee in order to minimize VOC emissions to the atmosphere: 1. A high-solids coating shall be utilized (less than or equal to 7.4 lb VOC/lb solids, as applied) 2. Standardized spray tips, application patterns, and fluid and air pressures will be maintinated for proper spraying operations. 3. Ongoing training of and feedback from employees will be maintained regarding paint usage rate to ensure proper mil thickness and transfer efficiencies. 4. Ongoing efforts will be made to implement VOC reducing product substitutions.	Title I Condition: 40 CFR Section 52.21 and Minn. R. 7007.3000
RECORDKEEPING	hdr
Daily Recordkeeping and Calculations: On each day of operation, the Permittee shall calculate, record, and maintain the total quantity of all VOC used at EU010. This shall be based on usage logs.	Title I Condition: Monitoring for limit under 40 CFR Section 52.21 and Minn. R. 7007.3000
Coating Content Records: The Permittee shall record and maintain the following for each coating applied at EU 010: 1). The VOC content, as lb VOC/gal of coating and lb VOC/lb solids, as applied. 2). The solids content, as lb solids/gal of coating, as applied.	Minn. R. 7007.0800, subp. 4 and 5

Facility Name: Marvin Windows & Doors

Permit Number: 13500002 - 001

Material Content: VOC, HAPs, and Solids (PM and PM<10 microns) contents in materials shall be determined by the Material Safety Data Sheet (MSDS) provided by the supplier for each material used. If a material content range is given on the MSDS, the highest number in the range shall be used in all compliance calculations. When using the MSDS as the basis of calculating particulate emissions, the conservative assumption is made that PM consists entirely of PM less than 10 microns. Other alternative methods approved by the MPCA may be used to determine the VOC, HAPs, and solids contents. The Commissioner reserves the right to require the Permittee to determine the VOC, HAP, and solids contents of any material, according to EPA or ASTM reference methods. If an EPA or ASTM reference method is used for material content determination, the data obtained shall supersede the MSDS.	Minn. R. 7007.0800, subp. 4 and 5
Daily VOC Calculations: By the end of each calendar day, the Permittee shall calculate and record the following: 1. The total usage of VOC containing materials for EU010, in tons, for the previous calendar day using the daily usage records. This record shall also include the VOC and solids contents of each material as determined by the Material Content requirement of this permit. 2. The 365-day Rolling Sum VOC usage, in tons, for the previous 365-day period by summing the daily VOC usage data for the previous 365 days.	Title I Condition: Monitoring for limit under 40 CFR Section 52.21 and Minn. R. 7007.3000
Corrective Actions: If the filters or any of their components are found during the inspections to need repair, the Permittee shall take corrective action as soon as possible. Corrective actions shall include completion of necessary repairs identified during the inspection, as applicable. Corrective actions include, but are not limited to, those outlined in the O & M Plan for the filter. The Permittee shall keep a written or electronic record of the type and date of any corrective action taken for each filter.	Minn. R. 7007.0800, subp. 4, 5 and 14
PERFORMANCE TESTING (See SV 018)	hdr

TABLE A: LIMITS AND OTHER REQUIREMENTS

Facility Name: Marvin Windows & Doors

Permit Number: 13500002 - 001

Subject Item: **EU 012 Boiler 3**

Associated Items: CE 014 Multiple Cyclone w/o Fly Ash Reinjection - Most Multiclones

SV 025 Boiler 3 Exhaust

What to do	Why to do it
LIMITS	hdr
Allowed Fuels: The Permittee shall burn only wood, as defined in Minn. R. 7011.1201, subp. 48, in this boiler.	Minn. R. 7007.0800, subp. 2
Total Particulate Matter: less than or equal to 0.4 lbs/million Btu heat input .	Minn. R. 7011.0515, subp. 1
Opacity: less than or equal to 20 percent opacity except for one six-minute period per hour of not more than 60 percent opacity.	Minn. R. 7011.0515, subp. 2
The Permittee shall operate and maintain the control equipment such that it achieves an overall control efficiency for Total Particulate Matter: greater than or equal to 4.1 percent control efficiency	Minn. R. 7007.0800, subp. 2 and 14
Visible Emissions: The Permittee shall check the stacks for any visible emissions once each day of operation during daylight hours.	Minn. R. 7007.0800, subp. 2
OPERATIONAL REQUIREMENTS	hdr
The Permittee shall operate and maintain CE014 in accordance with the Operation and Maintenance (O&M) Plan. The Permittee shall keep copies of the O&M Plan available onsite for use by staff and MPCA staff.	Minn. R. 7007.0800, subp. 14
The Permittee shall vent emissions from EU 012 to CE 014 any time that EU 012 is in operation.	Title I Condition: 40 CFR Section 52.21 and Minn. R. 7007.3000
PERFORMANCE TESTING	hdr
Performance Test: due before end of each 36 months following Permit Issuance to measure PM and PM10 emissions.	Minn. R. 7017.2020, subp. 1
MONITORING AND RECORDKEEPING	hdr
Recordkeeping of Visible Emissions. The Permittee shall record the time and date of each visible emission inspection and whether or not any visible emissions were observed.	Minn. R. 7007.0800, subp. 2 and 14
By the 15th of each month, the Permittee shall record and maintain the quantity of fuel used at EU012 for the previous month calculated from boiler water use. Permittee shall only burn wood and woodwaste.	Minn. R. 7007.0800, subp. 4 and 5
Corrective Actions: The Permittee shall take corrective action as soon as possible if any of the following occur: - the cyclone or any of its components are found during the inspections to need repair. Corrective actions shall return the operation to within the permitted range, and/or include completion of necessary repairs identified during the inspection, as applicable. Corrective actions include, but are not limited to, those outlined in the O & M Plan for the cyclone. The Permittee shall keep a written or electronic record of the type and date of any corrective action taken.	Minn. R. 7007.0800, subp. 4, 5 and 14
Daily Inspections: Once each operating day, the Permittee shall visually inspect the condition of the control equipment and associated connections with respect to any condition that may affect the control equipments performance. The Permittee shall maintain a daily written or electronic record of inspections.	Minn. R. 7007.0800, subp. 4 and 5
Periodic Inspections: At least once per calendar year, or more frequently as required by the manufacturing specifications, the Permittee shall inspect the control equipment components. The Permittee shall maintain a written or electronic record of these inspections.	Minn. R. 7007.0800, subp. 4, 5 and 14
Corrective Actions: If any of the control equipment components are found during the inspections to need repair, the Permittee shall take corrective action as soon as possible. Corrective actions shall include completion of necessary repairs identified during the inspection, as applicable. The Permittee shall keep a written or electronic record of the type and date of any corrective action taken.	Minn. R. 7007.0800, subp. 4, 5 and 14

TABLE A: LIMITS AND OTHER REQUIREMENTS

Facility Name: Marvin Windows & Doors

Permit Number: 13500002 - 001

Subject Item: **EU 013 Boiler 4**

Associated Items: CE 015 Flue Gas Recirculation

SV 026 Boiler 4 Exhaust

What to do	Why to do it
LIMITS	hdr
Total Particulate Matter: less than or equal to 0.4 lbs/million Btu heat input (potential to emit calculations are based on 0.00724 lbs/million BTU heat input).	Minn. R. 7011.0515, subp. 1
Opacity: less than or equal to 20 percent opacity except for one six-minute period per hour of not more than 60 percent opacity.	Minn. R. 7011.0515, subp. 2
OPERATIONAL LIMITS	hdr
Fuel Type: natural gas or propane only, by design.	Minn. R. 7007.0800, subp. 2
RECORDKEEPING	hdr
By the 15th day of each month, the Permittee shall record the quantity of fuel used at EU013 for the previous calendar month.	Minn. R. 7007.0800, subp. 4 and 5

TABLE A: LIMITS AND OTHER REQUIREMENTS

Facility Name: Marvin Windows & Doors

Permit Number: 13500002 - 001

Subject Item: **EU 014 Boiler 5 Wood Fired**

Associated Items: CE 017 Electrostatic Precipitator - High Efficiency

CE 043 Centrifugal Collector - Medium Efficiency

GP 012 Boilers 5 & 6

SV 027 Boiler 5 & 6 Exhaust

SV 028 Boiler 5 & 6 Exhaust Bypass

What to do	Why to do it
OPERATIONAL LIMITS	hdr
The Permittee shall vent emissions from EU014 to CE043 and CE017, operated in series, any time that EU014 is in operation.	Title I Condition: 40 CFR Section 52.21 and Minn. R. 7007.3000

TABLE A: LIMITS AND OTHER REQUIREMENTS

Facility Name: Marvin Windows & Doors

Permit Number: 13500002 - 001

Subject Item: **EU 015 Boiler 6 Wood Fired**

Associated Items: CE 017 Electrostatic Precipitator - High Efficiency

CE 044 Centrifugal Collector - Medium Efficiency

GP 012 Boilers 5 & 6

SV 027 Boiler 5 & 6 Exhaust

SV 028 Boiler 5 & 6 Exhaust Bypass

What to do	Why to do it
OPERATIONAL LIMITS	hdr
The Permittee shall vent emissions from EU015 to CE044 and CE017, operated in series, any time that EU015 is in operation.	Title I Condition: 40 CFR Section 52.21 and Minn. R. 7007.3000

TABLE A: LIMITS AND OTHER REQUIREMENTS

Facility Name: Marvin Windows & Doors

Permit Number: 13500002 - 001

Subject Item: **EU 035 KD Dip System**

Associated Items: CE 011 Activated Carbon Adsorption

GP 017 Wood Treatment Usage Limits 1

SV 007 Wood Treat System(s) Emissions

SV 008 Wood Treat System(s) Emissions

SV 015 Bypass for KD Dip System

What to do	Why to do it
OPERATIONAL LIMITS	hdr
Work Practice Requirements: The following work practices and standards shall be implemented and/or maintained by the Permittee at EU035 in order to minimize VOC emissions to the atmosphere: 1. The carbon adsorption system will be maintained and utilized at all times while the emission units are operating.	Title I Condition: Limit to avoid major modification under 40 CFR Section 52.21 and Minn. R. 7007.3000
CONTROL EQUIPMENT - see also CE 011	hdr
The Permittee shall vent the emissions from EU035 to CE011 (activated carbon adsorption) at all times when the emission unit is in operation. See CE 011 for activated carbon adsorption requirements.	Title I Condition: Limit to avoid major modification under 40 CFR Section 52.21 and Minn. R. 7007.3000; and Minn. R. 7007.0800, subp. 2 and 14

Facility Name: Marvin Windows & Doors

Permit Number: 13500002 - 001

Subject Item: **EU 036 Dip Dry System**

Associated Items: CE 011 Activated Carbon Adsorption

GP 018 Wood Treatment Usage Limits 2

GP 019 Wood Treatment VOC Limits

SV 007 Wood Treat System(s) Emissions

SV 008 Wood Treat System(s) Emissions

SV 012 Bypass for Dip Dry System

What to do	Why to do it
OPERATIONAL LIMITS	hdr
Work Practice Requirements: The following work practices and standards shall be implemented and/or maintained by the Permittee at EU036 in order to minimize VOC emissions to the atmosphere: 1. Wood to be dipped will be stacked with spacers to facilitate drainage and improve drying to the extent that product damage does not occur. 2. Dipped loads will be tilted for drainage after being dipped. 3. Recirculating fans in the drying ovens will be used to enhance evaporation. 4. The carbon adsorption system will be maintained and utilized at all times while the emission units are operating.	Title I Condition: 40 CFR Section 52.21 and Minn. R. 7007.3000
CONTROL EQUIPMENT - see also CE 011	hdr
The Permittee shall vent the emissions from EU036 to CE011 (activated carbon adsorption) at all times when the emission unit is in operation. See CE 011 for activated carbon adsorption requirements.	Title I Condition: 40 CFR Section 52.21; Minn. R. 7007.3000; and Minn. R. 7007.0800, subp. 2 and 14

TABLE A: LIMITS AND OTHER REQUIREMENTS

Facility Name: Marvin Windows & Doors

Permit Number: 13500002 - 001

Subject Item: **EU 039 Round Tops Dip System**

Associated Items: CE 011 Activated Carbon Adsorption

GP 018 Wood Treatment Usage Limits 2

GP 019 Wood Treatment VOC Limits

SV 007 Wood Treat System(s) Emissions

SV 008 Wood Treat System(s) Emissions

SV 013 Round Tops Bypass

SV 014 Round Tops Bypass

What to do	Why to do it
OPERATIONAL LIMITS	hdr
Work Practice Requirements: The following work practices and standards shall be implemented and/or maintained by the Permittee at EU039 in order to minimize VOC emissions to the atmosphere: 1. Air knives will be used on the system to remove excess surface solvent from the individual components. 2. The carbon adsorption system will be maintained and utilized at all times while the emission units are operating.	Title I Condition: 40 CFR Section 52.21 and Minn. R. 7007.3000
CONTROL EQUIPMENT - see also CE 011	hdr
The Permittee shall vent the emissions from EU039 to CE011 (activated carbon adsorption) at all times when the emission unit is in operation. See CE 011 for activated carbon adsorption requirements.	Title I Condition: 40 CFR Section 52.21; Minn. R. 7007.3000; and Minn. R. 7007.0800, subp. 2 and 14

TABLE A: LIMITS AND OTHER REQUIREMENTS

Facility Name: Marvin Windows & Doors

Permit Number: 13500002 - 001

Subject Item: **EU 040 Wood Bead Primer#1**

Associated Items: SV 019 Paint Emissions

What to do	Why to do it
LIMITS	hdr
Volatile Organic Compounds: less than or equal to 38 tons/year using 365-day Rolling Sum (usage).	Title I Condition: 40 CFR Section 52.21 and Minn. R. 7007.3000
BACT Work Practice Requirements: The Permittee shall use water-based coatings to minimize VOC emissions rates. Water-based coating is defined as those coatings having Volatile Organic Compounds: less than or equal to 0.746 lbs/gallon	Title I Condition: 40 CFR Section 52.21 and Minn. R. 7007.3000
MONITORING	hdr
Daily Recordkeeping and Calculations. On each day of operation, the Permittee shall calculate, record, and maintain the total quantity of all VOC used at EU040. This shall be based on usage logs.	Title I Condition: Monitoring for limit under 40 CFR Section 52.21, and Minn. R. 7007.3000
RECORDKEEPING	hdr
Daily VOC Usage Calculations: By the end of each calendar day, the Permittee shall calculate and record the following: 1.) The total usage of VOC containing materials for EU040, in tons, for the previous calendar day using the daily usage records. This record shall also include the VOC and solids contents of each material as determined by the Material Content requirement of this permit. 2.) The 365-day rolling sum VOC usage, in tons, for the previous 365-day period by summing the daily VOC usage data for the previous 365-days.	Title I Condition: Monitoring for limit under 40 CFR Section 52.21 and Minn. R. 7007.3000
Coating Content Records: The Permittee shall record and maintain the following for each coating applied at EU040: 1.) The VOC content, as lb VOC/gal of coating and lb VOC/lb solids, as applied. 2.) The solids content, as lb solids/gal of coating, as applied.	Minn. R. 7007.0800, subp. 4 and 5
Material Content: VOC, HAPs, and Solids (PM and PM10) contents in materials shall be determined by the Material Safety Data Sheet (MSDS) provided by the supplier for each material used. If a material content range is given on the MSDS, the highest number in the range shall be used in all compliance calculations. When using the MSDS as the basis of calculating particulate emissions, the conservative assumption is made that PM consists entirely of PM10. Other alternative methods approved by the MPCA may be used to determine the VOC, HAPs, and solids contents. The Commissioner reserves the right to require the Permittee to determine the VOC, HAP, and solids contents of any material, according to EPA or ASTM reference methods. If an EPA or ASTM reference method is used for material content determination, the data obtained shall supersede the MSDS.	Minn. R. 7007.0800, subp. 4 and 5

TABLE A: LIMITS AND OTHER REQUIREMENTS

Facility Name: Marvin Windows & Doors

Permit Number: 13500002 - 001

Subject Item: **EU 045 P2 Prime Line 2**

Associated Items: CE 047 Other

CE 055 Other

SV 020 Paint Emissions

What to do	Why to do it
LIMITS	hdr
Particulate Matter < 10 micron: less than or equal to 1.91 tons/year using 12-month Rolling Sum to be calculated by the 15th day of each month for the previous 12-month period as described later in this permit. Solids contents for each material shall be determined as described under the Material Content requirement. The calculation of solids used may take into account recovered/recycled solids as described under the Waste Credit requirement.	Title I Condition: 40 CFR Section 52.21 and Minn. R. 7007.3000
Total Particulate Matter: less than or equal to 0.3 grains/dry standard cubic foot of exhaust gas unless required to further reduce emissions to comply with the less stringent limit of either Minn. R. 7011.0730 or Minn. R. 7011.0735.	Minn. R. 7011.0715, subp. 1(A)
Opacity: less than or equal to 20 percent opacity.	Minn. R. 7011.0715, subp. 1(B)
OPERATIONAL REQUIREMENTS	hdr
Permittee shall maintain total enclosure and operate and maintain the control equipment so that it achieves an overall control efficiency Particulate Matter < 10 micron: greater than or equal to 95 percent control efficiency	Title I Condition: 40 CFR Section 52.21 and Minn. R. 7007.3000
Permittee shall operate and maintain the control equipment such that it achieves an overall control efficiency for Total Particulate Matter: greater than or equal to 95 percent control efficiency	Minn. R. 7007.0800, subp. 2 and 14
Permittee shall operate and maintain the panel filters any time that any process equipment controlled by the panel filters is in operation.	Title I Condition: 40 CFR Section 52.21 and Minn. R. 7007.3000
Operation and Maintenance of Filters: The Permittee shall operate and maintain each filter in accordance with the Operation and Maintenance (O & M) Plan. The Permittee shall keep copies of the O & M Plan available onsite for use by staff and MPCA staff.	Title I Condition: 40 CFR Section 52.21, Minn. R. 7007.3000, Minn. R. 7007.0800, subp. 14
MONITORING	hdr
Daily Inspections: Once each operating day, the Permittee shall visually inspect the condition of each panel filter with respect to alignment, saturation, tears, holes and any other condition that may affect the filter's performance. The Permittee shall maintain a daily written or electronic record of filter inspections.	Title I Condition: Monitoring for limit under 40 CFR Section 52.21 and Minn. R. 7007.3000
Periodic Inspections: At least once per calendar quarter, or more frequently as required by the manufacturing specifications, the Permittee shall inspect the control equipment components. The Permittee shall maintain a written or electronic record of these inspections.	Minn. R. 7007.0800, sub 4, 5 and 14
RECORDKEEPING	hdr
Daily Recordkeeping. On each day of operation, the Permittee shall calculate, record, and maintain the total quantity of all coatings and other solids containing materials used at this emissions unit. This shall be based on written or electronic usage logs, flowmeters and/or delivery records.	Title I Condition: Monitoring for limit under 40 CFR Section 52.21 and Minn. R. 7007.3000
Monthly Recordkeeping - PM10 Emissions. By the 15th of the month, the Permittee shall calculate and record the following: 1) The total usage of each solids containing material for the previous calendar month using the daily usage records. This record shall also include solids contents of each material as determined by the Material Content requirement of this permit. 2) The PM10 emissions for the previous month using the formulas specified in this permit. 3) The 12 month rolling sum PM10 emissions for the previous 12 month period by summing the monthly PM10 emissions data for the previous 12 months.	Title I Condition: Monitoring for limit under 40 CFR Section 52.21 and Minn. R. 7007.3000
Monthly Calculation -- PM10 Emissions. The Permittee shall calculate PM10 emissions from the spray booths using the following equations: PM10 (tons/month) = S(1-CE)(1-TE) - W S = (A1 x B1) + (A2 x B2) + (A3 x B3) + ... W = (C1 x D1) + (C2 x D2) + (C3 x D3) + ...	Minn. R. 7007.0800, subp. 4 and 5

Facility Name: Marvin Windows & Doors

Permit Number: 13500002 - 001

Monthly PM10 Emissions Calculation Continued: Where: S = total solids used in tons/month; CE = overall control efficiency, as a fraction. This shall be 0.95 for all spray booths; TE = transfer efficiency, as a fraction. This shall be 0.90, unless otherwise approved by the MPCA in writing. A# = amount of each solids containing material sprayed, in tons/month; B# = weight percent solids in A#, as a fraction; W = the amount of solids shipped in waste, in tons/month; C# = amount, in tons/month, of each solids containing waste material shipped. If the Permittee chooses to not take credit for waste shipments, this parameter would be zero; and D# = weight percent of solids in C#, as a fraction.	Minn. R. 7007.0800, subp. 4 and 5
Material Content: Solids (PM and PM<10 microns) contents shall be determined by the Material Safety Data Sheet (MSDS) provided by the supplier for each material used. If a material content range is given on the MSDS, the highest number in the range shall be used in all compliance calculations. When using the MSDS as the basis of calculating particulate emissions, the conservative assumption is made that PM consists entirely of PM less than 10 microns. Other alternative methods approved by the MPCA may be used to determine the solids contents. The Commissioner reserves the right to require the Permittee to determine the solids contents of any material, according to EPA or ASTM reference methods. If an EPA or ASTM reference method is used for material content determination, the data obtained shall supersede the MSDS.	Minn. R. 7007.0800, subp. 4 and 5
Waste Credit: If the Permittee elects to obtain credit for solids shipped in waste materials, the Permittee shall either use item 1 or 2 to determine the solids content for each credited shipment. 1) The Permittee shall analyze a composite sample of each waste shipment to determine the weight content of solids, excluding water. 2) The Permittee may use supplier data for raw materials to determine the solids contents of each waste shipment, using the same content data used to determine the content of raw materials. If the waste contains several materials, the content of mixed waste shall be assumed to be the lowest solids content of any of the materials.	Minn. R. 7007.0800, subp. 4 and 5
Corrective Actions: If the filters or any of their components are found during the inspections to need repair, the Permittee shall take corrective action as soon as possible. Corrective actions shall include completion of necessary repairs identified during the inspection, as applicable. Corrective actions include, but are not limited to, those outlined in the O & M Plan for the filter. The Permittee shall keep a written or electronic record of the type and date of any corrective action taken for each filter.	Minn. R. 7007.0800, sub 4, 5 and 14

TABLE A: LIMITS AND OTHER REQUIREMENTS

Facility Name: Marvin Windows & Doors

Permit Number: 13500002 - 001

Subject Item: **EU 047 3 Stage Fan Coater**

Associated Items: SV 022 Paint Emissions

What to do	Why to do it
LIMITS	hdr
Total Particulate Matter: less than or equal to 0.3 grains/dry standard cubic foot of exhaust gas unless required to further reduce emissions to comply with the less stringent limit of either Minn. R. 7011.0730 or Minn. R. 7011.0735.	Minn. R. 7011.0715, subp. 1(A)
Opacity: less than or equal to 20 percent opacity.	Minn. R. 7011.0715, subp. 1(B)
RECORDKEEPING	hdr
Coating Content Records: The Permittee shall record and maintain the following for each coating applied at EU047: 1. The VOC content, as lb VOC/gal of coating and lb VOC/lb solids, as applied. 2. The solids content, as lb solids/gal of coating, as applied.	Minn. R. 7007.0800, subp. 4 and 5
Material Content: VOC, HAPs, and Solids (PM and PM < 10 microns) contents in materials shall be determined by the Material Safety Data Sheet (MSDS) provided by the supplier for each material used. If a material content range is given on the MSDS, the highest number in the range shall be used in all compliance calculations. When using the MSDS as the basis of calculating particulate emissions, the conservative assumption is made that PM consists entirely of PM less than 10 microns. Other alternative methods approved by the MPCA may be used to determine the VOC, HAPs, and solids contents. The Commissioner reserves the right to require the Permittee to determine the VOC, HAP, and solids contents of any material, according to EPA or ASTM reference methods. If an EPA or ASTM reference method is used for material content determination, the data obtained shall supersede the MSDS.	Minn. R. 7007.0800, subp. 4 and 5

TABLE A: LIMITS AND OTHER REQUIREMENTS

Facility Name: Marvin Windows & Doors

Permit Number: 13500002 - 001

Subject Item: **EU 049 Overhead Hand Spray Line**

Associated Items: CE 048 Other

CE 056 Other

SV 023 Paint Emissions

What to do	Why to do it
LIMITS	hdr
Particulate Matter < 10 micron: less than or equal to 2.72 tons/year using 12-month Rolling Sum	Title I Condition: 40 CFR Section 52.21 and Minn. R. 7007.3000
Total Particulate Matter: less than or equal to 0.3 grains/dry standard cubic foot of exhaust gas unless required to further reduce emissions to comply with the less stringent limit of either Minn. R. 7011.0730 or Minn. R. 7011.0735.	Minn. R. 7011.0715, subp. 1(A)
Opacity: less than or equal to 20 percent opacity.	Minn. R. 7011.0715, subp. 1(B)
OPERATIONAL REQUIREMENTS	hdr
Permittee shall maintain total enclosure and operate and maintain the control equipment so that it achieves an overall control efficiency Particulate Matter < 10 micron: greater than or equal to 95 percent control efficiency	Title I Condition: 40 CFR Section 52.21 and Minn. R. 7007.3000
The Permittee shall operate and maintain the control equipment such that it achieves an overall control efficiency for Total Particulate Matter: greater than or equal to 95 percent control efficiency	Minn. R. 7007.0800, subp. 2 and 14
Permittee shall operate and maintain the panel filters any time that any process equipment controlled by the panel filters is in operation.	Title I Condition: 40 CFR Section 52.21 and Minn. R. 7007.3000
Operation and Maintenance of Filters: The Permittee shall operate and maintain each filter in accordance with the Operation and Maintenance (O & M) Plan. The Permittee shall keep copies of the O & M Plan available onsite for use by staff and MPCA staff.	Title I Condition: 40 CFR Section 52.21, Minn. R. 7007.3000, Minn. R. 7007.0800, subp. 14
MONITORING	hdr
Daily Inspections: Once each operating day, the Permittee shall visually inspect the condition of each panel filter with respect to alignment, saturation, tears, holes and any other condition that may affect the filter's performance. The Permittee shall maintain a daily written or electronic record of filter inspections.	Title I Condition: Monitoring for limit under 40 CFR Section 52.21 and Minn. R. 7007.3000
Periodic Inspections: At least once per calendar quarter, or more frequently as required by the manufacturing specifications, the Permittee shall inspect the control equipment components. The Permittee shall maintain a written or electronic record of these inspections.	Minn. R. 7007.0800, sub 4, 5 and 14
RECORDKEEPING	hdr
Daily Recordkeeping. On each day of operation, the Permittee shall calculate, record, and maintain the total quantity of all coatings and other solids containing materials used at this emissions unit. This shall be based on written or electronic usage logs, flowmeters and/or delivery records.	Title I Condition: Monitoring for limit under 40 CFR Section 52.21 and Minn. R. 7007.3000
Monthly Recordkeeping - PM10 Emissions. By the 15th of the month, the Permittee shall calculate and record the following: 1) The total usage of each solids containing material for the previous calendar month using the daily usage records. This record shall also include solids contents of each material as determined by the Material Content requirement of this permit. 2) The PM10 emissions for the previous month using the formulas specified in this permit. 3) The 12 month rolling sum PM10 emissions for the previous 12 month period by summing the monthly PM10 emissions data for the previous 12 months.	Title I Condition: Monitoring for limit under 40 CFR Section 52.21 and Minn. R. 7007.3000
Monthly Calculation -- PM10 Emissions. The Permittee shall calculate PM10 emissions from the spray booths using the following equations: PM10 (tons/month) = S(1-CE)(1-TE) - W S = (A1 x B1) + (A2 x B2) + (A3 x B3) + ... W = (C1 x D1) + (C2 x D2) + (C3 x D3) + ...	Minn. R. 7007.0800, subp. 4 and 5

Facility Name: Marvin Windows & Doors

Permit Number: 13500002 - 001

Monthly PM10 Emissions Calculation Continued: Where: S = total solids used in tons/month; CE = overall control efficiency, as a fraction. This shall be 0.95 for all spray booths; TE = transfer efficiency, as a fraction. This shall be 0.15, unless otherwise approved by the MPCA in writing. A# = amount of each solids containing material sprayed, in tons/month; B# = weight percent solids in A#, as a fraction; W = the amount of solids shipped in waste, in tons/month; C# = amount, in tons/month, of each solids containing waste material shipped. If the Permittee chooses to not take credit for waste shipments, this parameter would be zero; and D# = weight percent of solids in C#, as a fraction.	Minn. R. 7007.0800, subp. 4 and 5
Material Content: Solids (PM and PM<10 microns) contents shall be determined by the Material Safety Data Sheet (MSDS) provided by the supplier for each material used. If a material content range is given on the MSDS, the highest number in the range shall be used in all compliance calculations. When using the MSDS as the basis of calculating particulate emissions, the conservative assumption is made that PM consists entirely of PM less than 10 microns. Other alternative methods approved by the MPCA may be used to determine the solids contents. The Commissioner reserves the right to require the Permittee to determine the solids contents of any material, according to EPA or ASTM reference methods. If an EPA or ASTM reference method is used for material content determination, the data obtained shall supersede the MSDS.	Minn. R. 7007.0800, subp. 4 and 5
Waste Credit: If the Permittee elects to obtain credit for solids shipped in waste materials, the Permittee shall either use item 1 or 2 to determine the solids content for each credited shipment. 1) The Permittee shall analyze a composite sample of each waste shipment to determine the weight content of solids, excluding water. 2) The Permittee may use supplier data for raw materials to determine the solids contents of each waste shipment, using the same content data used to determine the content of raw materials. If the waste contains several materials, the content of mixed waste shall be assumed to be the lowest solids content of any of the materials.	Minn. R. 7007.0800, subp. 4 and 5
Corrective Actions: If the filters or any of their components are found during the inspections to need repair, the Permittee shall take corrective action as soon as possible. Corrective actions shall include completion of necessary repairs identified during the inspection, as applicable. Corrective actions include, but are not limited to, those outlined in the O & M Plan for the filter. The Permittee shall keep a written or electronic record of the type and date of any corrective action taken for each filter.	Minn. R. 7007.0800, sub 4, 5 and 14

TABLE A: LIMITS AND OTHER REQUIREMENTS

Facility Name: Marvin Windows & Doors

Permit Number: 13500002 - 001

Subject Item: **EU 321 P2 Prime Line 3**

Associated Items: CE 057 Other

CE 058 Other

SV 043 Paint Emissions

What to do	Why to do it
LIMITS	hdr
Total Particulate Matter: less than or equal to 0.3 grains/dry standard cubic foot of exhaust gas unless required to further reduce emissions to comply with the less stringent limit of either Minn. R. 7011.0730 or Minn. R. 7011.0735.	Minn. R. 7011.0715, subp. 1(A)
Opacity: less than or equal to 20 percent opacity.	Minn. R. 7011.0715, subp. 1(B)
OPERATIONAL REQUIREMENTS	hdr
Permittee shall vent emissions from EU321 to CE057 and CE058, operated in series, anytime EU321 is in operation.	Minn. R. 7007.0800, subp. 2 and 14; Minn. R. 7011.0715, subp. 1(A)
Permittee shall maintain total enclosure and operate and maintain the control equipment so that it achieves an overall control efficiency Total Particulate Matter: greater than or equal to 92 percent control efficiency	Minn. R. 7007.0800, subp. 2 and 14; Minn. R. 7011.0715, subp. 1(A)
Permittee shall operate and maintain the panel filters any time that any process equipment controlled by the panel filters is in operation.	Minn. R. 7007.0800, subp. 2 and 14; Minn. R. 7011.0715, subp. 1(A)
Operation and Maintenance of Filters: The Permittee shall operate and maintain each filter in accordance with the Operation and Maintenance (O & M) Plan. The Permittee shall keep copies of the O & M Plan available onsite for use by staff and MPCA staff.	Minn. R. 7007.0800, subp. 14
MONITORING	hdr
Daily Inspections: Once each operating day, the Permittee shall visually inspect the condition of each panel filter with respect to alignment, saturation, tears, holes and any other condition that may affect the filter's performance. The Permittee shall maintain a daily written or electronic record of filter inspections.	Minn. R. 7007.0800 subp. 4 and 5
Periodic Inspections: At least once per calendar quarter, or more frequently as required by the manufacturing specifications, the Permittee shall inspect the control equipment components. The Permittee shall maintain a written or electronic record of these inspections.	Minn. R. 7007.0800, sub 4, 5 and 14
RECORDKEEPING	hdr
Corrective Actions: If the filters or any of their components are found during the inspections to need repair, the Permittee shall take corrective action as soon as possible. Corrective actions shall include completion of necessary repairs identified during the inspection, as applicable. Corrective actions include, but are not limited to, those outlined in the O & M Plan for the filter. The Permittee shall keep a written or electronic record of the type and date of any corrective action taken for each filter.	Minn. R. 7007.0800, sub 4, 5 and 14

TABLE A: LIMITS AND OTHER REQUIREMENTS

Facility Name: Marvin Windows & Doors

Permit Number: 13500002 - 001

Subject Item: **EU 382 Internally Vented & Controlled Systems**

Associated Items: CE 063 Other

SV 048 Internally Vented & Controlled Systems

What to do	Why to do it
EMISSION AND OPERATIONAL LIMITS	hdr
Total Particulate Matter: less than or equal to 0.3 grains/dry standard cubic foot of exhaust gas unless required to further reduce emissions to comply with the less stringent limit of either Minn. R. 7011.0730 or Minn. R. 7011.0735.	Minn. R. 7011.0715, subp. 1(A)
Opacity: less than or equal to 20 percent opacity.	Minn. R. 7011.0715, subp. 1(B)
CONTROL EQUIPMENT - see CE 063	hdr
The Permittee shall vent wood milling emissions to control equipment meeting the requirements of CE 063 as specified in this permit.	Minn. R. 7007.0800, subp. 2

TABLE A: LIMITS AND OTHER REQUIREMENTS

Facility Name: Marvin Windows & Doors

Permit Number: 13500002 - 001

Subject Item: **CE 001 Fabric Filter - Low Temperature, i.e., T<180 Degrees F**

Associated Items:

EU 081 Moulder

EU 082 Moulder

EU 083 Moulder

EU 084 Moulder

EU 085 Moulder

EU 087 Moulder

EU 088 Moulder

EU 089 Moulder

EU 090 Moulder

EU 092 D/E Tenoner

EU 093 Sander Belt

EU 094 Band Re-Saw

EU 095 Moulder

EU 131 D/E Tenoner

GP 002 Wood Milling Equipment 2

GP 022 Control Equipment: Fabric Filters

What to do	Why to do it
LIMITS	hdr
Air Flow Rate: less than or equal to 91,800 actual cubic feet/minute (Exhaust Flow Capacity). This fabric filter exhaust flow capacity limit applies to all emission units controlled by this control device. The permittee shall keep the fabric filter design specifications showing the calculated maximum airflow on-site.	Title I Condition: 40 CFR Section 52.21; Minn. R. 7007.0800, subp. 2 and 14
PERFORMANCE TESTING	hdr
See GP 020 for performance testing requirements.	Minn. R. 7007.0800, subp. 2

TABLE A: LIMITS AND OTHER REQUIREMENTS

Facility Name: Marvin Windows & Doors

Permit Number: 13500002 - 001

Subject Item: **CE 003 Fabric Filter - Low Temperature, i.e., T<180 Degrees F**

Associated Items:

EU 080 Chop Saw

EU 091 D/E Tenoner

EU 098 Saw Cutoff

EU 099 D/E Tenoner

EU 100 D/E Tenoner

EU 101 D/E Tenoner

EU 103 D/E Tenoner

EU 104 Drilling Machine

EU 105 Drilling Machine

EU 106 Shaper

EU 107 Linear Cutoff Saw

EU 108 Saw Radial Arm

EU 109 Saw Radial Arm

EU 110 Linear Cutoff Saw

EU 111 Saw Radial Arm

EU 113 Saw Radial Arm

EU 115 D/E Tenoner

EU 116 D/E Tenoner

EU 117 D/E Tenoner

EU 119 Band Saw

EU 120 D/E Tenoner

EU 370 Saw Cutoff

EU 377 Chop Saw

GP 003 Wood Milling Equipment 3

GP 022 Control Equipment: Fabric Filters

What to do	Why to do it
LIMITS	hdr
Air Flow Rate: less than or equal to 76,500 actual cubic feet/minute (Exhaust Flow Capacity). This fabric filter exhaust flow capacity limit applies to all emission units controlled by this control device. The permittee shall keep the fabric filter design specifications showing the calculated maximum airflow on-site.	Title I Condition: 40 CFR Section 52.21(k); Minn. R. 7007.0800, subp. 2 and 14
PERFORMANCE TESTING	hdr
See GP 020 for performance testing requirements.	Minn. R. 7007.0800, subp. 2

TABLE A: LIMITS AND OTHER REQUIREMENTS

Facility Name: Marvin Windows & Doors

Permit Number: 13500002 - 001

Subject Item: **CE 005 Fabric Filter - Low Temperature, i.e., T<180 Degrees F**

Associated Items: EU 121 Saw Cutoff

EU 122 Saw Cutoff

EU 123 Saw Cutoff

EU 124 Finger Jointer

EU 125 Finger Jointer

EU 126 Finger Jointer

GP 004 Wood Milling Equipment 4

GP 022 Control Equipment: Fabric Filters

What to do	Why to do it
LIMITS	hdr
Air Flow Rate: less than or equal to 46,000 actual cubic feet/minute (Exhaust Flow Capacity). This fabric filter exhaust flow capacity limit applies to all emission units controlled by this control device. The permittee shall keep the fabric filter design specifications showing the calculated maximum airflow on-site.	Title I Condition: 40 CFR Section 52.21(k); Minn. R. 7007.0800, subp. 2 and 14
PERFORMANCE TESTING	hdr
See GP 020 for performance testing requirements.	Minn. R. 7007.0800, subp. 2

Facility Name: Marvin Windows & Doors

Permit Number: 13500002 - 001

Subject Item: **CE 007 Fabric Filter - Low Temperature, i.e., T<180 Degrees F**

Associated Items:

EU 057 Grinder

EU 058 Multi-Rip

EU 059 Band Re-Saw

EU 060 Saw Cutoff

EU 062 Saw Cutoff

EU 063 Saw Cutoff

EU 064 Saw Cutoff

EU 068 Saw Cutoff

EU 069 Saw Cutoff

EU 070 Cutback Saw

EU 071 Hog-Mini

EU 072 Saw Cutoff

EU 073 Moulder

EU 076 Saw Cutoff

EU 077 Saw Scan

EU 078 Rerip Saw

EU 079 Chop Saw Chop

EU 114 Saw Table

EU 347 Saw Rip

EU 348 Saw Thin Cut

EU 358 Cleaner

EU 372 Saw Cutoff

EU 378 Saw Cutoff

EU 383 Saw Radial Arm

GP 001 Wood Milling Equipment 1

GP 022 Control Equipment: Fabric Filters

What to do	Why to do it
LIMITS	hdr
Air Flow Rate: less than or equal to 61,200 actual cubic feet/minute (Exhaust Flow Capacity). This fabric filter exhaust flow capacity limit applies to all emission units controlled by this control device. The permittee shall keep the fabric filter design specifications showing the calculated maximum airflow on-site.	Title I Condition: 40 CFR Section 52.21(k); Minn. R. 7007.0800, subp. 2 and 14
PERFORMANCE TESTING	hdr
See GP 020 for performance testing requirements.	Minn. R. 7007.0800, subp. 2

TABLE A: LIMITS AND OTHER REQUIREMENTS

Facility Name: Marvin Windows & Doors

Permit Number: 13500002 - 001

Subject Item: **CE 009 Fabric Filter - Low Temperature, i.e., T<180 Degrees F**

Associated Items: EU 127 Moulder

EU 128 Moulder

EU 129 Moulder

EU 130 D/E Tenoner

EU 132 D/E Tenoner

EU 319 D/E Tenoner

GP 005 Wood Milling Equipment 5

GP 022 Control Equipment: Fabric Filters

What to do	Why to do it
LIMITS	hdr
Air Flow Rate: less than or equal to 115,300 actual cubic feet/minute (Exhaust Flow Capacity). This fabric filter exhaust flow capacity limit applies to all emission units controlled by this control device. The permittee shall keep the fabric filter design specifications showing the calculated maximum airflow on-site.	Title I Condition: 40 CFR Section 52.21(k); Minn. R. 7007.0800, subp. 2 and 14
PERFORMANCE TESTING	hdr
See GP 020 for performance testing requirements.	Minn. R. 7007.0800, subp. 2

TABLE A: LIMITS AND OTHER REQUIREMENTS

Facility Name: Marvin Windows & Doors

Permit Number: 13500002 - 001

Subject Item: **CE 011 Activated Carbon Adsorption**

Associated Items: EU 035 KD Dip System

EU 036 Dip Dry System

EU 039 Round Tops Dip System

GP 019 Wood Treatment VOC Limits

What to do	Why to do it
LIMITS	hdr
The Permittee shall operate and maintain CE011 such that it achieves an overall control efficiency for Volatile Organic Compounds: greater than or equal to 95 percent	Title I Condition: 40 CFR Section 52.21; Minn. R. 7007.3000; and Minn. R. 7007.0800, subp. 2 and 14
Temperature: less than or equal to 180 degrees F inlet temperature to carbon vessel A during the adsorption cycle. The permittee shall record the temperature once every 24 hours when in operation.	Title I Condition: 40 CFR Section 52.21; Minn. R. 7007.0800, subp. 2 and 14
Temperature: less than or equal to 180 degrees F inlet temperature to carbon vessel B during the adsorption cycle. The permittee shall record the temperature once every 24 hours when in operation.	Title I Condition: 40 CFR Section 52.21; Minn. R. 7007.0800, subp. 2 and 14
Temperature: less than or equal to 180 degrees F inlet temperature to carbon vessel C during the adsorption cycle. The permittee shall record the temperature once every 24 hours when in operation.	Title I Condition: 40 CFR Section 52.21; Minn. R. 7007.0800, subp. 2 and 14
Temperature: less than or equal to 180 degrees F inlet temperature to carbon vessel D during the adsorption cycle. The permittee shall record the temperature once every 24 hours when in operation.	Title I Condition: 40 CFR Section 52.21; Minn. R. 7007.0800, subp. 2 and 14
MONTORING AND OPERATING SCENARIO	hdr
CE011 shall be operated within the optimal operating conditions specified by the manufactuer or through the most recent performance test. These conditions include, but are not limited to, the parameters established through the most recent performance test.	Title I Condition: 40 CFR Section 52.21; Minn. R. 7007.3000; and Minn. R. 7007.0800, subp. 2 and 14
Monitoring Equipment: The Permittee shall install and maintain the necessary monitoring equipment for measuring and recording inlet temperature as required by this permit. The monitoring equipment must be installed, in use, and properly maintained whenever operation of the monitored control equipment is in operation.	Minn. R. 7007.0800, subp. 4
Daily Monitoring: The Permittee shall physically verify the operation of the monitoring equipment at least once each operating day to verify that it is working and recording properly. The Permittee shall maintain a written or electronic record of the daily verifications.	Minn. R. 7007.0800, subp. 4 and 5
Recordkeeping of Inlet Temperature. The Permittee shall record the time and date of each temperature reading and whether or not the recorded temperature was within the range specified in this permit.	Title I Condition: 40 CFR Section 52.21; Minn. R. 7007.0800, subp. 4 and 5
Annual Inspections: At least annually, the Permittee shall inspect the control equipment internal system components. The Permittee shall maintain a written or electronic record of the inspection and any corrective actions taken resulting from the inspection.	Minn. R. 7007.0800, subp. 4, 5 and 14
Annual Calibration: The Permittee shall calibrate the monitoring equipment at least annually and shall maintain a written or electronic record of the calibration and any action resulting from the calibration.	Minn. R. 7007.0800, subp. 4, 5 and 14
Corrective Actions: If the control device is operated outside the optimal operating conditions or if the control device or any of its components are found during the inspections to need repair, the Permittee shall take corrective action as soon as possible. Corrective actions shall return the control device to the optimal operating conditions and/or include completion of necessary repairs identified during the inspection, as applicable. Corrective actions include, but are not limited to, those outlined in the O&M Plan for the control device. The Permittee shall keep a written or electronic record of the type and date of any corrective action taken.	Minn. R. 7007.0800, subp. 4, 5 and 14
PERFORMANCE TESTING	hdr
Initial Performance Test: due 270 days after Permit Issuance, to measure emissions compared to the VOC emission limit (see GP 019).	Minn. R. 7017.2020, subp. 1

Facility Name: Marvin Windows & Doors

Permit Number: 13500002 - 001

Subject Item: **CE 019 Fabric Filter - Low Temperature, i.e., T<180 Degrees F**

Associated Items:

EU 096 Saw

EU 112 Saw Cutoff

EU 133 Single End

EU 134 Single End

EU 135 Saw Radial Arm

EU 136 Saw Radial Arm

EU 137 Saw Radial Arm

EU 138 Saw Cutoff

EU 139 Linear Cutoff Saw

EU 140 Saw

EU 141 Saw

EU 142 Single End

EU 143 CNC Router

EU 144 Saw

EU 145 Saw

EU 146 Router

EU 147 Single End

EU 148 Chop Saw

EU 149 Chop Saw

EU 150 Chop Saw

EU 319 D/E Tenoner

EU 329 Saw Chop

EU 332 Saw Radial Arm

EU 333 Saw Rerip

EU 351 Router

EU 376 Table Down Draft

GP 006 Wood Milling Equipment 6

GP 022 Control Equipment: Fabric Filters

What to do	Why to do it
LIMITS	hdr
Air Flow Rate: less than or equal to 57,600 actual cubic feet/minute (Exhaust Flow Capacity). This fabric filter exhaust flow capacity limit applies to all emission units controlled by this control device. The permittee shall keep the fabric filter design specifications showing the calculated maximum airflow on-site.	Title I Condition: Limit to avoid a classification s a major modification under 40 CFR Section 52.21; Minn. R. 7007.0800, subp. 2 and 14
PERFORMANCE TESTING	hdr
See GP 020 for performance testing requirements.	Minn. R. 7007.0800, subp. 2

Facility Name: Marvin Windows & Doors

Permit Number: 13500002 - 001

Subject Item: **CE 020 Fabric Filter - Low Temperature, i.e., T<180 Degrees F**

Associated Items:

EU 151 Single End

EU 152 Single End

EU 153 Shaper

EU 154 Shaper

EU 155 Single End

EU 156 Planer

EU 157 Sander Belt

EU 158 Chop Saw

EU 159 Single End

EU 160 Chop Saw

EU 161 Moulder

EU 162 Moulder

EU 163 D/E Tenoner

EU 164 Router (CNC)

EU 165 Single End

EU 166 Single End

EU 168 Shaper

EU 169 Shaper

EU 170 Single End

EU 171 Shaper

EU 172 Saw Rip

EU 173 Saw

EU 174 Sander Belt

EU 175 Saw

EU 176 Router

EU 177 Saw

EU 178 Lockrouter/Single Dr

EU 179 Saw Radial Arm

EU 180 Saw Radial Arm

EU 182 Saw Radial Arm

EU 183 Saw Radial Arm

EU 184 Saw Radial Arm

EU 185 Saw Radial Arm

EU 186 Saw Radial Arm

EU 187 Saw Radial Arm

EU 188 Saw Radial Arm

EU 189 Saw Radial Arm

EU 190 Band Saw

EU 191 Band Saw

Facility Name: Marvin Windows & Doors

Permit Number: 13500002 - 001

Associated Items:

EU 192 Band Saw

EU 193 Band Saw

EU 194 Band Saw

EU 195 Band Saw

EU 196 Saw Table

EU 197 Saw Table

EU 198 Saw Table

EU 200 Saw Table

EU 201 Saw Table

EU 202 Saw Table

EU 203 Saw Table

EU 204 Saw Table

EU 205 Saw Table

EU 206 Single End

EU 208 Saw

EU 209 Shaper

EU 210 Shaper

EU 211 Shaper

EU 212 Shaper

EU 213 Shaper

EU 214 Shaper

EU 215 Shaper

EU 216 Shaper

EU 217 Shaper

EU 218 Shaper

EU 219 Shaper

EU 220 Shaper

EU 221 Shaper

EU 222 Shaper

EU 223 Shaper

EU 224 Shaper

EU 225 Shaper

EU 226 Shaper

EU 227 Shaper

EU 228 Shaper

EU 229 Shaper

EU 230 Shaper

EU 231 Shaper

EU 232 Shaper

EU 233 Shaper

Facility Name: Marvin Windows & Doors

Permit Number: 13500002 - 001

Associated Items:

EU 234 Shaper

EU 235 Router

EU 236 Shaper

EU 237 Shaper

EU 238 Planer

EU 239 Planer

EU 241 Sander Belt

EU 242 Sander Belt

EU 243 Sander Belt

EU 244 Sander Belt

EU 245 Sander Belt

EU 246 Sander Disc

EU 247 Sander Disc

EU 248 Sander Disc

EU 249 Sander Disc

EU 250 Sander Disc

EU 251 Sander Disc

EU 252 Sander Disc

EU 253 Sander Disc

EU 254 Sander Disc

EU 255 Sander Disc

EU 256 Sander Disc

EU 257 Chop Saw

EU 258 Shaper

EU 259 Router Table

EU 260 Router Table

EU 261 Router

EU 262 Router

EU 263 Saw Radial Arm

EU 264 Shaper

EU 265 Saw Shaper

EU 267 Saw Woodbead

EU 268 Saw Radial Arm

EU 269 Coper

EU 270 Band Saw

EU 271 Planer

EU 272 Sander Vertical

EU 273 Saw Radial Arm

EU 274 Single End

EU 275 Single End

Facility Name: Marvin Windows & Doors

Permit Number: 13500002 - 001

Associated Items:

EU 276 Saw Table

EU 277 Band Saw

EU 278 Sander Belt

EU 279 Mortiser

EU 280 Sander Disc

EU 281 Chop Saw

EU 282 Chop Saw

EU 283 Chop Saw

EU 284 Chop Saw

EU 285 Chop Saw

EU 286 Chop Saw

EU 287 Saw Radial Arm

EU 288 Chop Saw

EU 289 Router

EU 290 Router

EU 291 Chop Saw

EU 292 Chop Saw

EU 293 Shaper

EU 294 Chop Saw

EU 295 Chop Saw

EU 296 Chop Saw

EU 297 Router

EU 298 Chop Saw

EU 299 Router

EU 300 Router

EU 301 Router

EU 302 Router

EU 303 Router

EU 304 Router

EU 305 Router

EU 306 Chop Saw

EU 307 Chop Saw

EU 308 Chop Saw

EU 309 Chop Saw

EU 310 Router Table

EU 311 Chop Saw

EU 312 Chop Saw

EU 313 Sander Drum

EU 324 Slotter

EU 325 Sander Disc

Facility Name: Marvin Windows & Doors

Permit Number: 13500002 - 001

Associated Items:

EU 326 Saw Band

EU 327 Router

EU 328 Shaper

EU 331 Router

EU 334 Sander Disc

EU 335 Router Table

EU 336 Shaper

EU 337 Router

EU 338 Saw Radial Arm

EU 339 Planer

EU 340 Saw Band

EU 341 Slotter

EU 342 Router

EU 343 Shaper

EU 344 Table Work

EU 345 Shaper

EU 346 Saw Chop

EU 349 Router

EU 352 Saw Miter

EU 353 Saw Chop

EU 354 Sander Belt

EU 355 Saw Shop

EU 356 Saw Radial Arm

EU 357 Router

EU 359 Router

EU 360 Sander

EU 361 Router

EU 362 Planer

EU 363 Saw Miter

EU 364 Saw Miter

EU 365 Saw Miter

EU 366 Saw Miter

EU 367 Saw Miter

EU 368 Saw Miter

EU 369 Sander Belt

EU 373 Sander

EU 379 Table Saw

EU 380 Single End

EU 381 Sander

EU 384 Single End

TABLE A: LIMITS AND OTHER REQUIREMENTS

Facility Name: Marvin Windows & Doors

Permit Number: 13500002 - 001

Associated Items: GP 009 Wood Milling Equipment 9

GP 022 Control Equipment: Fabric Filters

What to do	Why to do it
LIMITS	hdr
Air Flow Rate: less than or equal to 140,849 actual cubic feet/minute (Exhaust Flow Capacity). This fabric filter exhaust flow capacity limit applies to all emission units controlled by this control device. The permittee shall keep the fabric filter design specifications showing the calculated maximum airflow on-site.	Title I Conditon: Limit to avoid classification as a major modification Under 40 CFR Section 52.21; and Minn R. 7007.0800, subp. 2 and 14
PERFORMANCE TESTING	hdr
See GP 020 for performance testing requirements.	Minn. R. 7007.0800, subp. 2

TABLE A: LIMITS AND OTHER REQUIREMENTS

Facility Name: Marvin Windows & Doors

Permit Number: 13500002 - 001

Subject Item: **CE 021 Fabric Filter - Low Temperature, i.e., T<180 Degrees F**

Associated Items: EU 314 Tub Grinder 1

EU 315 Tub Grinder 2

EU 316 Vortex Grinder

GP 011 Wood Milling Equipment 11

GP 022 Control Equipment: Fabric Filters

What to do	Why to do it
LIMITS	hdr
Air Flow Rate: less than or equal to 140,849 actual cubic feet/minute (Exhaust Flow Capacity). This fabric filter exhaust flow capacity limit applies to all emission units controlled by this control device. The permittee shall keep the fabric filter design specifications showing the calculated maximum airflow on-site.	Title I Condition: Limit to avoid a classification as a major modification under 40 CFR Section 52.21; Minn. R. 7007.0800, subp. 2 and 14
PERFORMANCE TESTING	hdr
See GP 020 for performance testing requirements.	Minn. R. 7007.0800, subp. 2

TABLE A: LIMITS AND OTHER REQUIREMENTS

Facility Name: Marvin Windows & Doors

Permit Number: 13500002 - 001

Subject Item: **CE 060 Fabric Filter - Low Temperature, i.e., T<180 Degrees F**

Associated Items: EU 374 D/E Tenoner

EU 375 Moulder

GP 021 Wood Milling Equipment 12

GP 022 Control Equipment: Fabric Filters

What to do	Why to do it
LIMITS	hdr
Air Flow Rate: less than or equal to 72,440 actual cubic feet/minute (Exhaust Flow Capacity). This fabric filter exhaust flow capacity limit applies to all emission units controlled by this control device. The permittee shall keep the fabric filter design specifications showing the calculated maximum airflow on-site.	Title I Condition: 40 CFR Section 52.21; Minn. R. 7007.0800, subp. 2 and 14
PERFORMANCE TESTING	hdr
See GP 020 for performance testing requirements.	Minn. R. 7007.0800, subp. 2

TABLE A: LIMITS AND OTHER REQUIREMENTS

Facility Name: Marvin Windows & Doors

Permit Number: 13500002 - 001

Subject Item: **CE 063 Other**

Associated Items: EU 382 Internally Vented & Controlled Systems

What to do	Why to do it
EMISSION AND OPERATIONAL LIMITS	hdr
Air Flow Rate: less than or equal to 250,000 actual cubic feet/minute (Exhaust Flow Capacity). This fabric filter system (includes fabric and cartridge filters) exhaust flow capacity limit applies to all emission units controlled by this control device. The permittee shall keep the fabric filter system design specifications showing the calculated maximum airflow on-site.	Title I Condition: 40 CFR Section 52.21; Minn. R. 7007.0800, subp. 2 and 14
Total Particulate Matter: less than or equal to 0.002 grains/dry standard cubic foot using 3-hour Average .	Title I Condition: 40 CFR Section 52.21, Minn. R. 7007.3000, and limit to avoid classification as a major modification under 40 CFR Section 52.21 [most stringent meets the limits set by Minn. R. 7011.0715, subp. 1(A)]
Particulate Matter < 10 micron: less than or equal to 0.002 grains/dry standard cubic foot using 3-hour Average .	Title I Condition: 40 CFR Section 52.21, Minn. R. 7007.3000, and limit to avoid classification as a major modification under 40 CFR Section 52.21
Total Particulate Matter: less than or equal to 0.3 grains/dry standard cubic foot of exhaust gas unless required to further reduce emissions to comply with the less stringent limit of either Minn. R. 7011.0730 or Minn. R. 7011.0735.	Minn. R. 7011.0715, subp. 1(A)
Opacity: less than or equal to 20 percent opacity	Minn. R. 7011.0715, subp. 1(B)
The Permittee shall operate and maintain the fabric filter system (includes fabric and cartridge filters) such that it achieves an overall control efficiency for Total Particulate Matter: greater than or equal to 92 percent	Title I Condition: 40 CFR Section 52.21; Minn. R. 7007.0800, subp. 2 and 14
The Permittee shall operate and maintain the fabric filter system (includes fabric and cartridge filters) such that it achieves an overall control efficiency greater for Particulate Matter < 10 micron: greater than or equal to 92 percent	Title I Condition: 40 CFR Section 52.21; Minn. R. 7007.0800, subp. 2 and 14
OPERATIONAL REQUIREMENTS	hdr
Operation of the fabric filter system (includes fabric and cartridge filters) is federally enforceable for replaced, new and/or modified wood milling equipment and may be considered when determining permitting applicability for such changes.	Title I Condition: Limit to avoid classification as a modification under 40 CFR Section 52.21; Minn. R. 7007.3000
The Permittee shall operate and maintain each fabric filter system (includes fabric and cartridge filters) any time the associated process equipment is in operation.	Minn. R. 7007.0800, subp. 2 and 14
The Permittee shall operate and maintain the fabric filter system (includes fabric and cartridge filters) in accordance with the Operation and Maintenance (O & M) Plan. The Permittee shall keep copies of the O & M Plan available onsite for use by staff and MPCA staff.	Minn. R. 7007.0800, subp. 14
The Permittee shall operate and maintain the fabric filter system (includes fabric and cartridge filters) at all times that any emission unit controlled by the fabric filter is in operation.	Title I Condition: 40 CFR Section 52.21; Minn. R. 7007.0800, subp. 2 and 14
MONITORING	hdr
Fabric Filter System (includes fabric and cartridge filters) Department Procedure: The Permittee shall retain at the Facility and shall implement a Department Procedure (DP) for all air pollution control equipment described. At a minimum, the DP shall require the use of such controls at all times that internally vented wood milling equipment is in operation, shall include a description of (the minimum but not necessarily the only) corrective actions to be taken to restore the equipment and practices to proper operation to meet applicable permit conditions, a description of the employee training program for the DP, and the written or electronic records kept to demonstrate DP implementation. The DP may be incorporated into the Facility's O&M Plan. Corrective actions may include the repair or replacement of the control device with a similar device.	Minn. R. 7007.0800, subp. 2 and 14
RECORDKEEPING	hdr
Recordkeeping of Equipment Changes: The Permittee shall keep and maintain a list of the fabric filter system (includes fabric and cartridge filters) and the airflows for each piece of the fabric filter system. The record shall show that the total fabric filter system airflow is less than the limit. This list shall be updated each time a change is made. The record shall include the date the change was made, the change to EU 382, a brief description of the equipment, and the airflow for each piece of equipment.	Title I Condition: Limit to avoid classification as a modification under40 CFR Section 52.21; Minn. R. 7007.3000

TABLE A: LIMITS AND OTHER REQUIREMENTS

Facility Name: Marvin Windows & Doors

Permit Number: 13500002 - 001

Subject Item: TK 001 Preservative Concentrate

What to do	Why to do it
The Permittee shall equip storage vessel TK001 with a permanent submerged fill pipe.	Minn. R. 7011.1505, subp. 3

TABLE A: LIMITS AND OTHER REQUIREMENTS

Facility Name: Marvin Windows & Doors

Permit Number: 13500002 - 001

Subject Item: TK 002 Mineral Spirits

What to do	Why to do it
The Permittee shall equip storage vessel TK002 with a permanent submerged fill pipe.	Minn. R. 7011.1505, subp. 3
Except as specified in 40 CFR Section 60.116b(a) & (b), the vessel is exempt from the General Provisions (pt. 60, subp. A) and from the provisions of subp. Kb.	40 CFR Section 60.110b(b); Minn. R. 7011.1520(c)
Recordkeeping: Maintain written or electronic records showing the dimensions of the tank and an analysis showing the tank capacity. These records shall be maintained for the life of the facility.	40 CFR Section 60.110b(b); Minn. R. 7011.1520(c)

TABLE A: LIMITS AND OTHER REQUIREMENTS

Facility Name: Marvin Windows & Doors

Permit Number: 13500002 - 001

Subject Item: **FS 001 Wood Fuel Storage Pile - Field**

What to do	Why to do it
No person shall allow avoidable amounts of particulate matter from becoming airborne.	Minn. R. 7011.0150

TABLE A: LIMITS AND OTHER REQUIREMENTS

Facility Name: Marvin Windows & Doors

Permit Number: 13500002 - 001

Subject Item: **FS 005 Wood Fuel Storage Pile - Boiler Complex**

What to do	Why to do it
No person shall allow avoidable amounts of particulate matter from becoming airborne.	Minn. R. 7011.0150

TABLE A: LIMITS AND OTHER REQUIREMENTS

Facility Name: Marvin Windows & Doors

Permit Number: 13500002 - 001

Subject Item: **FS 006 Truck Traffic - Unpaved Roads**

Associated Items: CE 022 Dust Suppression

What to do	Why to do it
No person shall allow avoidable amounts of particulate matter from becoming airborne.	Minn. R. 7011.0150
Maintain a written or electronic record of dust suppression applications.	Minn. R. 7007.0800, subp. 5

TABLE B: SUBMITTALS

Facility Name: Marvin Windows & Doors

Permit Number: 13500002 - 001

Also, where required by an applicable rule or permit condition, send to the Permit Technical Advisor notices of:
- accumulated insignificant activities,
- installation of control equipment,
- replacement of an emissions unit, and
- changes that contravene a permit term.

Send submittals that are required to be submitted to the U.S. EPA regional office to:

Mr. George Czerniak
Air and Radiation Branch
EPA Region V
77 West Jackson Boulevard
Chicago, Illinois 60604

Each submittal must be postmarked or received by the date specified in the applicable Table. Those submittals required by parts 7007.0100 to 7007.1850 must be certified by a responsible official, defined in Minn. R. 7007.0100, subp. 21. Other submittals shall be certified as appropriate if certification is required by an applicable rule or permit condition.

Send submittals that are required by the Acid Rain Program to:

U.S. Environmental Protection Agency
Clean Air Markets Division
1200 Pennsylvania Avenue NW (6204N)
Washington, D.C. 20460

Send any application for a permit or permit amendment to:

AQ Permit Technical Advisor
Industrial Division
Minnesota Pollution Control Agency
520 Lafayette Road North
St. Paul, Minnesota 55155-4194

Table B lists most of the submittals required by this permit. Please note that some submittal requirements may appear in Table A or, if applicable, within a compliance schedule located in Table C. Table B is divided into two sections in order to separately list one-time only and recurrent submittal requirements.

Unless another person is identified in the applicable Table, send all other submittals to:

AQ Compliance Tracking Coordinator
Industrial Division
Minnesota Pollution Control Agency
520 Lafayette Road North
St. Paul, Minnesota 55155-4194

TABLE B: ONE TIME SUBMITTALS OR NOTIFICATIONS

Facility Name: Marvin Windows & Doors

Permit Number: 13500002 - 001

What to send	When to send	Portion of Facility Affected
Application for Permit Reissuance	due 180 days before expiration of Existing Permit	Total Facility
Testing Frequency Plan	due 60 days after Initial Performance Test for PM emissions. The plan shall specify a testing frequency based on the test data and MPCA guidance. Future performance tests based on one-year (12 month), 36 month, and 60 month intervals, or as applicable, shall be required upon written approval of the MPCA.	SV018
Testing Frequency Plan	due 60 days after Initial Performance Test for PM-10 emissions. The plan shall specify a testing frequency based on the test data and MPCA guidance. Future performance tests based on one-year (12 month), 36 month, and 60 month intervals, or as applicable, shall be required upon written approval of the MPCA.	SV018
Testing Frequency Plan	due 60 days after Initial Performance Test for VOC emissions. The plan shall specify a testing frequency based on the test data and MPCA guidance. Future performance tests based on one-year (12 month), 36 month, and 60 month intervals, or as applicable, shall be required upon written approval of the MPCA.	CE011

TABLE B: RECURRENT SUBMITTALS

Facility Name: Marvin Windows & Doors

Permit Number: 13500002 - 001

What to send	When to send	Portion of Facility Affected
Semiannual Deviations Report	due 30 days after end of each calendar half-year following Permit Issuance. The first semiannual report submitted by the Permittee shall cover the calendar half-year in which the permit is issued. The first report of each calendar year covers January 1 - June 30. The second report of each calendar year covers July 1 - December 31. If no deviations have occured, the Permittee shall submit the report stating no deviations.	Total Facility
Compliance Certification	due 31 days after end of each calendar year following Permit Issuance (for the previous calendar year). To be submitted on a form approved by the Commissioner, both to the Commissioner and to the US EPA regional office in Chicago. This report covers all deviations experienced during the calendar year.	Total Facility

APPENDIX I
Facility Name: Marvin Windows & Doors
Permit Number: 13500002-001

Appendix I
NOTE Correction: KD/Department Dip Dry VOC Usage Limit = 182 tons/year
Dip Dry/Round Tops VOC Usage Limit = 687 tons/year

Marvin Windows and Doors, Warroad, M

Wood Treatment VOC Usage Calculation Proposal

May 21, 2002

The following diagram shows the possible paths that product may flow throughout the systems. Letters A through E and G through N represent gallons of liquid. Letter F represents vapor flow from KD Dip system to the solvent recovery system. The dashed boxes distinguish the two "VOC usage systems".

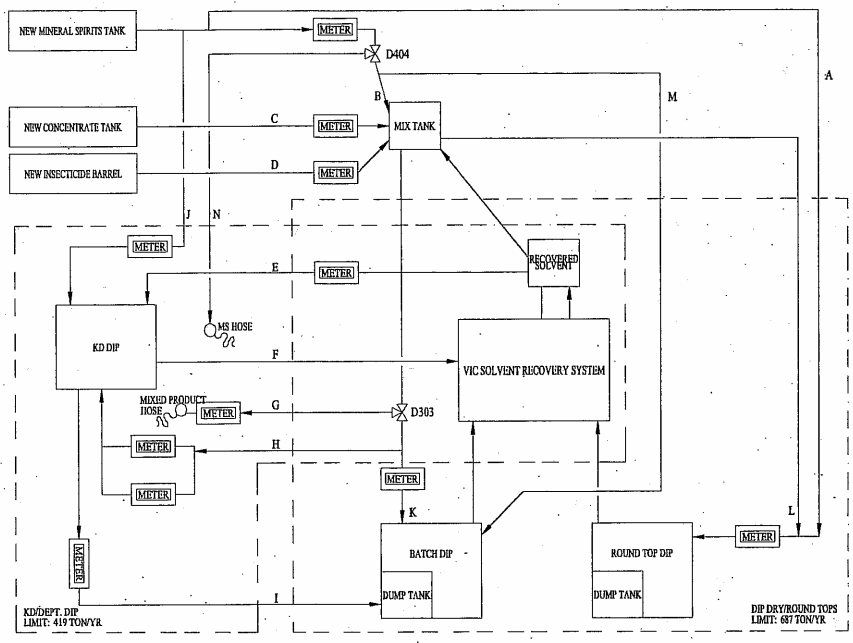

Our objective is to determine the VOC usage for each of the two systems (Dip Dry/Round Tops and KD/Departmental Dip). We can calculate these values by adding the product going into each system and subtracting the product going out. Data would be converted from gallons to VOC's (pounds/tons) based on the appropriate VOC contents.

If we consider the recovered solvent to be in both boxes, the usage for each system would be calculated by multiplying the ratio of gallons of mixed product used in each system to the total mixed product used in both systems by the total new product to the mix tank. Additional new product would also be added (J, A, M, and N) as indicated in the following VOC usage formulas:

KD/Department Dip (VOC Usage Limit = 419 tons/year):
USAGE = ((G+H-I)/(G+H+K+L) * (B+C+D)) + J + N

Dip Dry/Round Tops (VOC Usage Limit = 687 tons/year):
USAGE = ((K+L+I)/(G+H+K+L) * (B+C+D)) + A + M

This option calculates the usage of mixed product for a system based on a ratio of gallons used in that system to total gallons used in both systems. The recovered mineral spirits are not included in the usage calculations; rather the mineral spirits VOC's are only counted when new mineral spirits are added to the system.

NOTE Correction: KD/Department Dip Dry VOC Usage Limit = 182 tons/year
Dip Dry/Round Tops VOC Usage Limit = 687 tons/year

APPENDIX I
Facility Name: Marvin Windows & Doors
Permit Number: 13500002-001

APPENDIX II
Facility Name: Marvin Windows & Doors
Permit Number: 13500002-001

Appendix II

Insignificant Activities and General Applicable Requirements

The table below lists the insignificant activities that are currently at the facility and their associated general applicable requirements.

Minn. R. 7007.1300, subpart	Rule Description of the Activity	Applicable Requirement
3(A)	Fuel use: space heaters fueled by, kerosene, natural gas, or propane. *Marvin Windows has space heaters.*	Minn. R. 7011.0610 (PM and Opacity)
3(B)	Infrared electric ovens. *Marvin Windows has an IR cure oven.*	Minn. R. 7011.0110 (Opacity)
3(G)	Emissions from laboratory operations. *Marvin Windows has an "incoming quality control lab".*	Minn. R. 7011.0715 (PM and Opacity)
3(H)(3)	Brazing, soldering or welding equipment. *Marvin Windows has welding operations that satisfy this description.*	Minn. R. 7011.0715
3(H)(4)	Blueprint copiers and photographic processes. *Marvin Windows has photocopy equipment.*	Min.. R. 7011.0110 (Opacity)
3(I)	Individual Emissions units at a stationary source, each of which have a potential to emit the following pollutants in amounts less than: 1. 4,000 lbs/yr of carbon monoxide; and 2. 2,000 lbs/yr each of nitrogen oxide, sulfur dioxide, particulate matter, particulate matter less than 10 microns, volatile organic compounds (including hazardous air pollutant containing VOC) , and ozone. *Marvin Windows has the following units that qualify under this part: flax shive building, sawdust storage bin, carbon regen cooling tower, printing, remediation bioreactor, bulk mineral spirits storage, RT dump tank, mix tank, drip dry dump tank, and recovered mineral spirits.*	Minn. R. 7011.0715 (PM and Opacity)
3(J)	Fugitive Dust Emissions from Unpaved Parking Lots. *Marvin Windows has unpaved parking lots.*	Minn. R. 7011.0150 (PM)

3(K)	Infrequent Use of Spray Paint Equipment. *Marvin Windows uses spray paint for general maintenance* and upkeep purposes.	Minn. R. 7011.0715 (PM and Opacity)
4	Individual Emissions units at a stationary source, each of which have a potential to emit the following pollutants in amounts less than: A. 5.7 lbs/hr of carbon monoxide; and B. 2.28 lbs/hr each of nitrogen oxide, sulfur dioxide, particulate matter, particulate matter less than 10 microns, volatile organic compounds (including hazardous air pollutant containing VOC) , and ozone. *Marvin Windows has the following units that quality under this part: printing operations and bulk preservative concentrate storage.*	Minn. R. 7011.0715 (PM and Opacity)

APPENDIX III
Facility Name: Marvin Windows & Doors
Permit Number: 13500002-001

Appendix III

Available Modeled Parameters

(Note: Initial modeling contained additional units that no longer exist)

Current Stack/Vent Identification	Marvin Source Designation	Particulate Emission Rate (lb./hr)	Stack Height (ft)	Gas Exit Temp. (°F)	Flow Rate (acfm)	Stack Diameter (ft)
SV002	SH-002	1.57540	31.0	70.3	91,800	6.53
SV003	SH-004	1.31271	29.5	70.3	76,440	5.64
SV004	SH-006	0.78929	31.0	70.3	46,020	5.51
SV001	SH-050	1.05000	33.0	70.3	61,200	5.51
SV005	SH-009	1.97858	60.0	70.3	115,620	7.15
SV006	SH-010	0.98834	40.0	70.3	57,780	5.87
SV009	SH-049	1.97858	40.0	70.3	115,620	7.15
SV011	SH-052	1.97858	30.0	70.3	115,620	7.15
SV018	SB-010	0.09008	35.0	80.3	14,280	3.51
	SB-012	0.09008	35.0	80.3	14,280	3.51
SV025	BS-003	6.30560	45.0	300.3	9,120	2.17
SV026	BS-004	0.16016	45.0	500.3	14,040	2.76
SV027/028	BS-005	8.70800	60.0	300.3	25,980	4.50
SV029	GN-003	0.27024	31.0	915.3	2,640	0.98
SV030	GN-004	0.27024	31.0	915.3	2,640	0.98
SV031	GN-005	0.27024	35.0	915.3	2,640	0.98
SV032	GN-006	0.13008	40.0	915.3	1,320	0.49
SV033	GN-007	0.13008	40.0	915.3	1,320	0.49
SV034	GN-008	0.74048	40.0	885.3	1,680	0.59
SV035	GN-009	0.74048	40.0	885.3	1,680	0.59
SV036	GN-010	0.74048	40.0	885.3	1,680	0.59
SV037	GN-011	0.44040	34.0	895.3	1,020	0.49
Insignificant	VN-319	0.10111	43.5	70.3	0	2.60

TECHNICAL SUPPORT DOCUMENT
For
AIR EMISSION PERMIT NO. 13500002-001

This Technical Support Document (TSD) is intended for all parties interested in the draft permit and to meet the requirements that have been set forth by the federal and state regulations (40 CFR § 70.7(a)(5) and Minn. R. 7007.0850, subp.1). The purpose of this document is to provide the legal and factual justification for each applicable requirement or policy decision considered in the preliminary determination to issue the permit.

1. General Information

1.1. Applicant and Stationary Source Location

Owner Address	Operator Address	Stationary Source Address (SIC Code: 2431)
Marvin Lumber & Cedar Co. P.O. Box 100 Highway 11 West Warroad, MN 56763	Marvin Windows & Doors P.O. Box 100 Highway 11 West Warroad, MN 56763	Marvin Windows and Doors Highway 11 West Warroad, MN 56763 Roseau County
	Contact: Bradley J. Baumann Environmental Manager Phone: (218) 386-1430, x1803 Fax: (218) 386-4046	Same

1.2. Description of Permit Action

Marvin Lumber and Cedar Company (the Permittee) owns and operates Marvin Windows and Doors (the Facility). The Facility manufactures wood windows and doors for residential and commercial application.

The manufacturing process consists mainly of wood milling, wood treatment, assembly, coating, and shipping. The Facility also has several boilers and emergency generators as well as several processes that qualify as insignificant activities. The main emissions are Volatile Organic Compounds (VOC), Particulate Matter and Particulate Matter less then 10 microns in diameter (PM/PM_{10}) and various other pollutants from the combustion of wood, diesel fuel, natural gas, and propane. The Facility is an area source of Hazardous Air Pollutant (HAP) emissions. The permit contains requirements that limit emissions of nitrogen oxides (NO_x), VOCs, and PM/PM_{10}.

Wood materials enter the Facility as either raw lumber or cutstock by either truck or rail. Pine is the primary wood used for window and door production; other species are also used on occasion. The wood is transformed into piece parts using a variety of wood milling equipment. The wood milling equipment is divided into 9 different groups (GP001 through GP006, GP009, GP011 and GP021), each group with its own exhaust stack and control device. Shavings generated by these operations are collected pneumatically. All 9 externally-vented milling operations have particulate matter control devices that consist of either cyclones and/or filter baghouses used in series. Additionally, the Facility does have several small groups of wood milling equipment (indentified as EU382) that are controlled and vented inside the buildings.

Coarse shavings and larger pieces of wood by-product generated at the Facility are ground up in 3 grinders that make up GP011. The grinders are identified as EU314, Tub Grinder #1; EU315, Tub Grinder #2; and EU316 Vortex Grinder. Pneumatic shavings transfer systems are used to transport shavings generated by the wood milling equipment at the Facility. The primary source of shavings is the cyclones and filter baghouses that control emissions from the 9 groups of milling equipment discussed previously.

A large percentage of collected shavings are transported to Minnesota Sawdust, which is located on contiguous property. Facility shavings that are not transported to Minnesota Sawdust are burned in one of 3 wood-fired boilers. Shavings are stored on-site in the outdoor boiler fuel storage pile (FS001), the active boiler fuel feed storage pile (FS005), in the boiler complex or in the fuel silo.

The majority of milled wood parts are treated prior to assembly. The wood treatment systems at the Facility apply a long lasting water repellant, fungal prevention and termite protection to the wood components of the windows and doors. The preservative and insecticide formulation contains a mineral spirits carrier. VOC emissions result from evaporation of the mineral spirits carrier during the drying process. The Facility has four different types of treatment equipment: Departmental Dip (EU037), Dip Dry (EU036), Round Tops Dip (EU039), and KD In-Line Treatment (EU035). All but the department dip systems are currently vented to a carbon adsorption control device (i.e., solvent recovery) for VOC emissions. Departmental Dip stations are small containers located throughout the facility for treating small wood parts and end dipping cut parts. Emissions from the containers are emitted as fugitive emissions and are not controlled.

The Facility also has several coating operations for priming window and door components. A water based primer is used for this coating operation. Final topcoat is provided by the end user after purchase. Four spray booths equipped with panel filters to control emissions of PM/PM_{10} include: EU010, Magna Spray Booth; EU045, P2 Prime Line #2; EU049, Overhead Hand Spray Booth; and EU321, P2 Prime Line #3. Both EU045 and EU321 have associated curing ovens, respectively EU046 and EU322.

There are four additional coating operations that do not use spray application. These coating operations consist of hand (brush) application or airless non-atomized liquid stream application (low-pressure flow coat), where the component to be coated passes through a curtain of coating material. Because these operations consist of a non-atomized liquid stream, no PM/PM_{10} emissions are generated and no PM/PM_{10} controls are required. The liquid stream coating operations include: EU038, Hand Priming; EU040, Wood Bead Primer 1; EU 350, Wood Bead Primer 2; and EU047, 3-Stage Fan Coater. Both EU040 and EU047 have associated curing ovens, respectively EU042 and EU048.

The Facility uses several types of glues, adhesives, caulks, silicones, glaze, clean up materials, maintenance paints, and other miscellaneous VOC containing products throughout the manufacturing and assembly process. For ease of tracking and to provide a conservative estimate of VOC emissions, these operations are grouped together and represented as one emissions unit, EU055, Miscellaneous VOC.

The boiler complex at the Facility consists of 4 boilers, 3 of which are wood-fired and 1 that is natural gas or LPG (propane)-fired. Boiler No. 3 (EU012), Boiler No. 5 (EU014) and Boiler No. 6 (EU015) are wood-fired and utilize wood shavings from the manufacturing process and/or purchased fuel. The wood fuel is supplemented with wood purchased from off-site operations.

Boiler No. 4 (EU013) was converted to natural gas and LPG in the mid-1990's. Boiler No. 3 is vented to a multiclone to control PM/PM_{10} emissions. Boiler Nos. 5 and 6 are equipped with mechanical fly ash collectors and, in addition, are routed to a common stack with an electrostatic precipitator (ESP) to control PM/PM_{10} emissions. Steam generated by the boilers is used for space heat, process heat and humidification. Process steam is used mainly for carbon desorption and heating drying ovens. Fly ash collected from the pollution control devices is transferred through a common pneumatic system to a common collection point.

The Facility has twelve diesel-powered electrical generators (EU016 through EU027) that are used in power outages. All generators are limited to 600 hours per year annual operation. The Facility also has 1 emergency fire pump engine (EU031) that is also limited to 600 hours per year annual operation. Typically, the generators and fire pump engine are test-run for maintenance purposes at varying frequencies (e.g., monthly, weekly, etc.).

This Part 70 Operating Permit is a consolidation of existing applicable conditions from previous permitting actions and includes two minor permit amendments. One amendment allowed a new flow/fan coater, the other allowed the installation of a filterbaghouse, cyclone and wood milling equipment. This permit will incorporate more detailed specifications of the emission units, pollution control equipment, new rules and existing regulations that apply to the facility.

The permit application for a Part 70 Total Facility Permit was submitted and received by the Minnesota Pollution Control Agency (MPCA) in April 1995. The minor amendments that are being incorporated into this action were initially received by the MPCA in January and October of 2005. The permittee has continued to update these applications throughout the completion of this permitting action.

1.3. Description of All Amendments Issued Since the Issuance of the Last Total Facility Permit and to be Included in the Part 70 Permit

Since the issuance of the first total facility permit, the Facility has requested several modifications. All emission limitations and requirements from previous permit actions are carried forward to this Part 70 Air Emissions Operating Permit. Past limits include: limits to avoid New Source Review, limits as a result of Prevention of Significant Deterioration (PSD) major modifications, and limits to demonstrate compliance with National Ambient Air Quality Standards (NAAQS). Table 1 provides a summary of the historical permit actions. More details have been provided in Attachment 1.

Table 1. Previous Permit Actions.

Permit Number and Issuance Date	Action Authorized
1001-75-O-1, February 19, 1975	Initial permit for operation of a mechanical collector (cyclone).
1001-78-I-1	Installation of a wood waste-fired boiler.
Consent Decree, December 27, 1990	Limits incorporated into total facility permit.
Compliance Agreement, December 15, 1992	Limits incorporated into total facility permit
13500002-001 (1001A-93-OT-1) January 15, 1993	Initial total facility permit.
13500002-002 (1001A-93-P-1) June 8, 1993	Pronto permit for minor stack modifications.
13500002-003 (1001A-93-2)	Installation of a biological wastewater

August 18, 1993	treatment system related to remediation activities.
13500002-004 (Amendment 1 to 1001A-93-OT-1) June 8, 1994	Replacement of downdraft paint booths with conventional total enclosure paint booths.
13500002-005 (Amendment 2 to 1001A-93-OT-1) August 30, 1994	Replacement of 2 diesel-fired electrical generators.
13500002-006 (Part 70 Application Submittal) April 21, 1995	Number assigned to Part 70 application submitted by Facility.
13500002-005 (Administrative Amendment) April 25, 1996	Corrected facility I.D. number in previous amendment: 13500002-005 was incorrectly identified as 13500002-004.
13500002-007 (Amendment 3 to 1001A-93-OT-1) June 19, 1996	Installation of a diesel-fired electrical generator.
13500002-008 (Amendment 4 to 1001A-93-OT-1) August 12, 1997	Installation of a diesel-fired electrical generator.
13500002-008 (Administrative Amendment) August 9, 1999	Administrative amendment to simplify VOC usage calculations for wood treatment.
13500002-009 (Amendment 5 to 1001A-93-OT-1) April 29, 2002	Pollution control project to vent existing uncontrolled wood treatment operations to an existing carbon adsorption system.
13500002-010 (Amendment 6 to 1001A-93-OT-1) September 9, 2002	Correction to VOC emission calculations.
13500002-001 Part 70 Operating Permit	**Current Permit Action**

1.4. Facility Emissions

Table 2 provides a summary of the total facility potential emissions, including insignificant activities. See Attachment 1 for detailed emission calculations.

Table 2: Total Facility Potential to Emit Summary

	PM tpy	PM_{10} tpy	SO_2 tpy	NO_x tpy	VOC tpy	CO tpy	Lead tpy	Single HAP tpy	All HAPs tpy
Total Facility Limited Potential Emissions	155.2	150.0	14.5	253.5	1051.0	212.2	0.00	6.1	20.3
Total Facility Actual Emissions (2004)	8.19	5.05	3.84	20.82	307.60	47.36	0.00	HAPs not reported in emission inventory	

Table 3. Facility and Permit Classification

Program	Major Source	*Synthetic Minor	*Minor

Prevention of Significant Deterioration (PSD)	X		
Nonattainment Area Review	NA	NA	NA
Part 70 Permit Program	X		
Part 63 National Emissions Standards for Hazardous Air Pollutants (NESHAP)			X

* Refers to potential emissions that are less than those specified as major by 40 CFR § 52.21, 40 CFR § 51 Appendix S, 40 CFR § 70, and 40 CFR § 63.

This permit authorizes no facility changes that result in an emissions increase.

2. Regulatory and/or Statutory Basis

New Source Review
The Facility is an existing major stationary source under New Source Review regulations. No changes are authorized by this permit.

Part 70 Permit Program
The Facility is a major source under the Part 70 permit program.

New Source Performance Standards (NSPS)
The bulk mineral spirits storage tank (TK002) is subject to 40 CFR § 60, Subpart Kb, Standards of Performance for Volatile Organic Liquid Storage Vessels for Which Construction, Reconstruction, or Modification Commenced after July 23, 1984.

No other Facility emission units are subject to NSPS requirements. All facility boilers were installed prior to the effective date of 06/09/89 for 40 CFR § 60, Subpart Dc, Small Industrial-Commercial-Institutional Steam Generators >10 MMBtu but <100 MMBtu. Boiler No. 4 was converted from a wood-fired boiler to a natural gas-fired boiler, however, the conversion resulted in no emission increase, thus was not considered a modification as defined in 40 CFR §60.2.

National Emission Standards for Hazardous Air Pollutants (NESHAP)

The Facility is an area source of HAP emissions with less than 25 tpy for the aggregate of all HAPs and less than 10 tpy for each individual HAP, therefore, the NESHAPs do not apply.

Minnesota State Rules

Portions of the Facility are subject to the following Minnesota Standards of Performance:

- Minn. R. 7001.0150, Subp. 2, Terms and Conditions of Permits, Special Conditions
- Minn. R. 7007.0100, Subp. 25, Title I Condition
- Minn. R. 7007.0800, Subp. 2, Emission Limitations and Standards

- Minn. R. 7011.0070, Listed Control Equipment and Control Equipment Efficiencies
- Minn. R. 7011.0515, Standards of Performance for New Indirect Heating Equipment
- Minn. R. 7011.0550, Table II, Indirect Heating Equipment
- Minn. R. 7011.0715, Standards of Performance for Post-1969 Industrial Process Equipment
- Minn. R. 7011.0735, Source Gas Volume Concentration
- Minn. R. 7011.1505, Standards of Performance for Storage Vessels
- Minn. R. 7011.2300, Standards of Performance for Stationary Internal Combustion Engines

Table 4 provides a summary of the significant sources of emissions and the applicable regulations and standards.

Table 4. Regulatory Overview of Facility

Level	Applicable Regulations	Comments
GP001-006, 009, 011, 021 (Wood Milling Equipment)	Title I Condition: 40 CFR § 52.21 Minn. R. 7011.0715	Control equipment requirements. Standards of performance for particulate and opacity.
GP012 (EU014-EU015)	Title I Condition: 40 CFR § 52.21 Minn. R. 7011.0515	PSD BACT limits set for PM and PM_{10}. Standards of Performance for New Indirect Heating Equipment. Unit burns wood only. Standards of performance for particulate and opacity.
GP013 (EU042, EU046, EU048, EU322)	Minn. R. 7011.0715	Standards of performance for particulate and opacity.
GP014 (EU016-EU023)	Title I Condition: 40 CFR § 52.21 Minn. R. 7005.0100, subp. 35a Minn. R. 7011.2300	Limit on annual hours of operation to comply with NAAQS. Diesel fuel only. Standards of Performance for Stationary Internal Combustion Engines.
GP015 (EU024-EU025)	Title I Condition: 40 CFR § 52.21 Minn. R. 7005.0100, subp. 35a Minn. R. 7011.2300	Limit on annual hours of operation to avoid PSD. Diesel fuel only. Standards of Performance for Stationary Internal Combustion Engines.

Level	Applicable Regulations	Comments
GP016 (EU026, EU027, EU031)	Minn. R. 7007.0800, subp. 2 Minn. R. 7005.0100, subp. 35a Minn. R. 7011.2300	Limit on annual hours of operation. Diesel fuel only. Standards of Performance for Stationary Internal Combustion Engines.
GP017 (EU035, EU037)	Title I Condition: Limit to avoid major modification under 40 CFR § 52.21	Limit on annual usage of wood preservative mixture to limit VOC emissions.
GP018 (EU036, EU039)	Title I Condition: Limit to avoid major modification under 40 CFR § 52.21	Limit on annual usage of wood preservative mixture to limit VOC emissions.
GP019 (EU036, EU039)	Title I Condition: 40 CFR § 52.21	BACT Limit: VOC less than or equal to 19.6 lb/hr.
GP020 (Testing requirements)	Minn. R. 7007.0800, subp. 2 Minn. R. 7017.2020	Performance test requirements.
GP022 (CE 001, 003, 005, 007, 009, 019, 020, 021, 060)	Title I Condition: 40 CFR § 52.21, Minn. R. 7007.3000 Minn. R. 7007.0800, subp. 2 Minn. R. 7011.0715	Control equipment requirements. Standards of performance.
SV018 (EU 010)	Minn. R. 7017.2020, subp. 1	Performance Testing
EU010 (CE012, CE050)	Title I Condition: 40 CFR § 52.21 Title I Condition: 40 CFR § 52.21 Minn. R. 7011.0715	BACT limits set for VOC, PM and PM_{10} carried forward from 1993 permit, but modified to reflect removal of emission sources. Includes work practice requirements. Control equipment efficiency and operation requirements. Standards of performance for particulate and opacity.
EU012 (CE014)	Minn. R. 7011.0515, subp. 1 Minn. R. 7007.0800, subp. 2 Minn. R. 7011.0515 Minn. R. 7007.0800, subp. 14	Standards of Performance for New Indirect Heating Equipment. Unit burns wood only. Standards of performance for particulate and opacity. Control equipment operation requirements.
EU013	Minn. R. 7011.0515	Standards of Performance for New Indirect Heating Equipment.

Level	Applicable Regulations	Comments
	Minn. R. 7007.0800, subp. 2	Unit burns natural gas or LPG.
EU014 (CE017, CE043)	Title I Condition: 40 CFR § 52.21	Control equipment operation requirements.
EU015 (CE017, CE044)	Title I Condition: 40 CFR § 52.21	Control equipment operation requirements.
EU035 (GP007)	Title I Condition: Limit to avoid major modification under 40 CFR § 52.21	Control equipment operation and work practice requirements.
EU036 (GP007)	Title I Condition: Limit to avoid major modification under 40 CFR § 52.21	Control equipment operation and work practice requirements.
EU039 (GP007)	Title I Condition: Limit to avoid major modification under 40 CFR § 52.21	Control equipment operation and work practice requirements.
EU040	Title I Condition: 40 CFR § 52.21	BACT Limit: VOC annual rolling sum and work practice requirements. Includes daily recordkeeping and calculations.
EU045 (CE047, CE055)	Title I Condition: 40 CFR § 52.21 Minn. R. 7011.0715	BACT Limit: PM10 annual rolling sum. Includes enclosure and control equipment requirements, as well as recordkeeping and calculations. Standards of performance for particulate and opacity.
EU047	Minn. R. 7011.0715	Standards of performance for particulate and opacity.
EU049 (CE048, CE056)	Title I Condition: 40 CFR § 52.21 Minn. R. 7011.0715	BACT Limit: PM_{10} annual rolling sum. Includes enclosure and control equipment requirements, as well as recordkeeping and calculations. Standards of performance for particulate and opacity.
EU321 (CE057, CE058)	Minn. R. 7011.0715 Minn. R. 7007.0800, subp. 2 and 14; Minn. R. 7011.0715, subp. 1(A)	Standards of performance for particulate and opacity. Control equipment requirements.
EU382 (CE063)	Minn. R. 7011.0715 Minn. R. 7007.0800, subp. 2 and 14;	Standards of performance for particulate and opacity. Control equipment requirements.
CE 001, 003, 005, 007, 019, 020, 021, 060	Title I Condition: 40 CFR § 52.21, Minn. R. 7007.0800 Minn. R. 7007.0800	Exhaust flow capacity limit to demonstrate compliance with NAAQS. Performance testing requirements.
CE009	Title I Condition: 40 CFR §	Exhaust flow capacity limit to demonstrate

Level	Applicable Regulations	Comments
	52.21 Title I Condition: 40 CFR § 52.21 Minn. R. 7007.0800 Minn. R. 7007.0800	compliance with BACT limit and NAAQS. Performance testing requirements.
CE011	Title I Condition: Limit to avoid major modification under 40 CFR § 52.21 Minn. R. 7007.0800 Minn. R. 7017.2020	Control equipment operation, pressure drop, and recordkeeping requirements taken to avoid a major modification. Non-Title I Conditions for control equipment monitoring, O&M Plan provisions, and corrective action requirements. Performance testing requirements.
CE 063	Title I Condition: 40 CFR § 52.21, Minn. R. 7007.0800 Minn. R. 7007.0800	Exhaust flow capacity limit. Control equipment requirements.
TK001	Minn. R. 7011.1505, Subp. 3	Tank design requirements.
TK002	Minn. R. 7011.1505, Subp. 3	Tank design requirements.
FS001	Minn. R. 7011.0150	General particulate matter requirements.
FS005	Minn. R. 7011.0150	General particulate matter requirements.
FS006	Minn. R. 7011.0150 Minn. R. 7007.0800, Subp. 5	General particulate matter requirements and recordkeeping.

CE012, CE014, CE017, CE043, CE044, CE047, CE048, CE050, CE55, CE056, CE057 and CE058 are not individually listed in Table 4 as requirements for this control equipment are listed at the EU or GP level.

CE023, CE024, CE025, CE026, CE027, CE028, CE029, CE030, CE031, CE032, CE033, CE034, CE035, CE036, CE037, CE038, CD039, CE040, CE041 and CE042 are cyclones operated in series with fabric filters that are associated with the following wood milling equipment groups: GP001, GP002, GP003, GP004 and GP005. The cyclones are listed as control equipment but the operating permit contains no requirements for these control devices. The cyclones are discussed in detail in Section 3.2.

Several facility modifications were made since the original Title V Operating Permit application submittal. Additionally, emission unit organization, such as emission unit groups and source numbering, has changed significantly since the original initial processing of the operating permit application. Therefore, Table 5 has been included to document some of the organizational changes.

Table 5. Organizational Changes.

Level	Comments
EU001	Removed – Incorrectly entered in DELTA.
EU002	Removed – Incorrectly entered in DELTA.
EU003	Removed – Incorrectly entered in DELTA.
EU004	Removed – Incorrectly entered in DELTA.

Level	Comments
EU005	Removed – Incorrectly entered in DELTA.
EU006	Removed – Incorrectly entered in DELTA.
EU007	Removed – Incorrectly entered in DELTA.
EU008	Removed – Incorrectly entered in DELTA.
EU009	Removed – Emissions accounted for in EU035, 036 and 039.
EU011	Source removed from service.
EU028	Removed – Incorrectly entered in DELTA.
EU029	Source reclassified as insignificant activity.
EU030	Removed – Incorrectly entered in DELTA.
EU032	Removed – Incorrectly entered in DELTA.
EU033	Removed – Incorrectly entered in DELTA.
EU034	Removed – Incorrectly entered in DELTA.
EU041	Source removed from service.
EU043	Source removed from service.
EU044	Source removed from service.
EU050	Removed – Incorrectly entered in DELTA.
EU051	Source consolidated into EU055, Misc. VOC.
EU052	Source consolidated into EU055, Misc. VOC.
EU053	Source consolidated into EU055, Misc. VOC.
EU054	Source consolidated into EU055, Misc. VOC.
EU056	Source reclassified as insignificant activity.
EU317	Removed – Future source, never installed.
EU318	Removed – Future source, never installed.
EU320	Removed – Future source, never installed.
FS002	Removed – Source incorrectly classified as Fugitive, now EU055
FS003	Removed – Incorrectly entered into DELTA.
FS004	Source removed from service.

3. Technical Information

The facility is subject to several emissions limitations based on BACT and Ambient Air Quality Impacts analysis performed as part of previous PSD modifications. Previous analyses were reviewed, documented and incorporated into Air Emissions Permit No. 1001A-93-OT-1. All PSD limits have been carried over from Air Emissions Permit No. 1001A-93-OT-1 and incorporated into this operating permit.

Since the issuance of Air Emissions Permit No. 1001A-93-OT-1, a "backwards looking" BACT analysis was submitted by Marvin Windows on July 8, 2003 to address the installation of water-based primer processes that were installed in 1997. This "backwards looking" BACT analysis was required as part of an Administrative Penalty Order (APO) dated June 6, 2003. The 1997 modification was originally proposed and permitted as a minor modification with respect to PSD rules. However, it was determined that the emission calculations incorporated an incorrect capture efficiency associated with the proposed paint booths. Incorporation of the correct capture efficiency for the paint booths would result in a significant increase in particulate emissions under PSD rules. The APO required that BACT be installed on the paint booths, which resulted in the

installation of total enclosures. Revised emission calculations incorporating the BACT equivalent controls reduced the emission increase associated with the 1997 modification to less than significant levels under PSD rules. Additional details concerning the APO and subsequently required BACT analysis and modeling are included in Section 3.4.

3.1 Ambient Air Quality Analysis

An Ambient Air Quality Impacts Analysis was prepared and submitted on March 30, 1992 (supplemented on June 16, 1992) as part of the PSD preconstruction review included in Air Emissions Permit No. 1001A-93-OT-1. Several changes affecting modeled source parameters have taken place at the facility since the execution and submittal of the ambient air quality impacts analysis. The majority of these changes involved the decommissioning and removal of emission sources, reconfiguration of pollution control equipment, and consolidation of some stack/vents. However, several insignificant and minor modifications that involved the installation of new emission units were initiated. Table 6 provides a detailed listing of the previously modeled stack parameters.

Table 6. Modeled Stack Parameters

Current Stack/Vent Identification	Marvin Source Designation	Particulate Emission Rate (lb./hr)	Stack Height (ft)	Gas Exit Temp. (°F)	Flow Rate (acfm)	Stack Diameter (ft)
SV002	SH-002	1.57540	31.0	70.3	91,800	6.53
SV003	SH-004	1.31271	29.5	70.3	76,440	5.64
SV004	SH-006	0.78929	31.0	70.3	46,020	5.51
SV001	SH-050	1.05000	33.0	70.3	61,200	5.51
SV005	**SH-009**	**1.97858**	**60.0**	**70.3**	**115,620**	**7.15**
SV006	SH-010	0.98834	40.0	70.3	57,780	5.87
SV009	SH-049	1.97858	40.0	70.3	115,620	7.15
~~Removed~~	~~SH-051~~	~~1.97858~~	~~30.0~~	~~70.3~~	~~115,620~~	~~7.15~~
SV011	SH-052	1.97858	30.0	70.3	115,620	7.15
~~Removed~~	~~SH-053~~	~~1.97858~~	~~40.0~~	~~80.3~~	~~115,620~~	~~7.15~~
~~Removed~~	~~SB-001~~	~~0.34032~~	~~35.0~~	~~80.3~~	~~17,640~~	~~4.00~~
~~Removed~~	~~SB-002~~	~~0.15000~~	~~35.0~~	~~80.3~~	~~14,640~~	~~3.51~~
~~Removed~~	~~SB-003~~	~~0.34032~~	~~35.0~~	~~80.3~~	~~15,000~~	~~3.31~~
~~Removed~~	**~~SB-004~~**	**~~0.18016~~**	**~~35.0~~**	**~~80.3~~**	**~~15,120~~**	**~~2.82~~**
~~Removed~~	~~SB-005~~	~~0.19016~~	~~35.0~~	~~80.3~~	~~3,180~~	~~2.00~~
~~Removed~~	~~SB-006~~	~~0.19016~~	~~35.0~~	~~80.3~~	~~4,620~~	~~2.00~~
~~Removed~~	**~~SB-007~~**	**~~0.14016~~**	**~~35.0~~**	**~~80.3~~**	**~~12,060~~**	**~~3.51~~**
~~Removed~~	~~SB-008~~	~~0.11008~~	~~35.0~~	~~80.3~~	~~27,000~~	~~4.00~~
~~Removed~~	**~~SB-009~~**	**~~0.17016~~**	**~~35.0~~**	**~~80.3~~**	**~~13,800~~**	**~~2.82~~**
~~Removed~~	**~~SB-010~~**	**~~0.09008~~**	**~~35.0~~**	**~~80.3~~**	**~~16,500~~**	**~~3.51~~**
~~Removed~~	**~~SB-011~~**	**~~0.17016~~**	**~~35.0~~**	**~~80.3~~**	**~~19,800~~**	**~~3.31~~**
SV018	**SB-012**	**0.09008**	**35.0**	**80.3**	**14,280**	**3.51**
	SB-010	**0.09008**	**35.0**	**80.3**	**14,280**	**3.51**
~~Removed~~	**~~SB-017~~**	**~~0.12008~~**	**~~45.0~~**	**~~70.3~~**	**~~480~~**	**~~2.00~~**
~~Not Installed~~	~~SB-024~~	~~0.11984~~	~~45.0~~	~~70.3~~	~~1,380~~	~~2.00~~
~~Not Installed~~	~~SB-025~~	~~0.31984~~	~~44.0~~	~~70.3~~	~~28,380~~	~~2.23~~
SV025	BS-003	6.30560	45.0	300.3	9,120	2.17

Current Stack/Vent Identification	Marvin Source Designation	Particulate Emission Rate (lb./hr)	Stack Height (ft)	Gas Exit Temp. (°F)	Flow Rate (acfm)	Stack Diameter (ft)
SV026	BS-004	0.16016	45.0	500.3	14,040	2.76
SV027/028	**BS-005**	**8.70800**	**60.0**	**300.3**	**25,980**	**4.50**
~~Removed~~	~~GN-001~~	~~0.74048~~	~~31.0~~	~~885.3~~	~~1,680~~	~~0.98~~
~~Removed~~	~~GN-002~~	~~0.74048~~	~~31.0~~	~~885.3~~	~~1,680~~	~~0.98~~
SV029	GN-003	0.27024	31.0	915.3	2,640	0.98
SV030	GN-004	0.27024	31.0	915.3	2,640	0.98
SV031	**GN-005**	**0.27024**	**35.0**	**915.3**	**2,640**	**0.98**
SV032	**GN-006**	**0.13008**	**40.0**	**915.3**	**1,320**	**0.49**
SV033	**GN-007**	**0.13008**	**40.0**	**915.3**	**1,320**	**0.49**
SV034	GN-008	0.74048	40.0	885.3	1,680	0.59
SV035	GN-009	0.74048	40.0	885.3	1,680	0.59
SV036	**GN-010**	**0.74048**	**40.0**	**885.3**	**1,680**	**0.59**
SV037	GN-011	0.44040	34.0	895.3	1,020	0.49
~~Removed~~	~~SH-012~~	~~0.42064~~	~~20.0~~	~~70.3~~	~~6,840~~	~~0.82~~
~~Removed~~	~~SH-013~~	~~0.48040~~	~~20.0~~	~~70.3~~	~~7,800~~	~~0.82~~
~~Removed~~	~~SH-023~~	~~0.06306~~	~~13.2~~	~~70.3~~	~~960~~	~~0.49~~
Insignificant	VN-319	0.10111	43.5	70.3	0	2.60

Note 1: Shaded cells indicate parameters that have changed since original modeling analysis.
Note 2: Bold cells indicate sources that consume increment as a result of the 1992 PSD modification.
Note 3: Strikeout indicates sources that have been removed from service.
Note 4: NOx and VOC modeling were also performed. This data is not available at the time of this permitting action.

Results of the previous dispersion modeling using the above stack parameters and including background sources are listed in Table 7.

Table 7. Previous Dispersion Modeling Results.

Time Averaging Period	**Model Results ($\mu g/m^3$)**	**Standard ($\mu g/m^3$)**	**% of Standard**
Ozone			
1-Hour	215.2	235	92%
PM_{10} NAAQS			
Annual	32.7	50.0	65%
24-Hour	122.2	150.0	81%
TSP PSD Increment			
Annual	2.2	19	12%
24-Hour	21.0	37	57%

The results of the dispersion modeling analysis listed in Table 7 demonstrate compliance of the facility with both NAAQS and PSD Class II allowable increment standards with a wide margin of compliance. Additionally, ambient TSP monitoring performed on-site from June 1993 to June 1994 further demonstrate compliance of the facility indicating impacts of approximately 50 percent of the TSP standard in force at that time. As indicated in Table 6, some of the sources that were previously modeled have since been modified and many have been removed from

service. Furthermore, approximately 15 new stacks and associated emission units have been added to the facility and have not been included in the dispersion modeling analysis.

While several stack and emission unit modifications have taken place since the submittal of the 1992 dispersion modeling analysis, an overall reduction of potential PM/PM_{10} emissions has been experienced by the facility. Potential PM/PM_{10} emissions have been reduced. Based on the previously demonstrated margin of compliance through both modeling and monitoring, and the fact that potential particulate emissions have been reduced, completion of a revised PM_{10} dispersion modeling analysis is not warranted at this time. Additionally, Marvin has paved various parking lots.

The operating permit does require that NO_x modeling data be submitted as specified in MPCA guidance for modeling information requests. This modeling information is for data collection purposes and no modeling analysis is required at this time. This is a state only requirement and is not enforceable by the EPA Administrator or citizens under the CAA.

3.2 Wood Milling Equipment Cyclones

Wood milling equipment at the Facility (EU057 – EU347) is divided into 9 different groups (GP001 through GP006, GP009, GP011 and GP021), each group with its own exhaust stack and control device. Shavings generated by these operations are collected pneumatically. Several of the externally-vented milling operations have particulate matter control devices that consist of cyclones and filter baghouses used in series. The baghouses associated with the emission groups are the primary pollution control devices and contain requirements for operation listed in the permit. The primary purpose of the cyclones is to recover sawdust that is either sold or used as boiler fuel. The use of cyclones as control equipment is not necessary to comply with emission limits for the affected emission groups.

Because use of the cyclones is not necessary for maintaining compliance with emission limitations imposed on each wood milling group, detailed monitoring requirements for the cyclones have not been proposed in this permit. However, for inventory purposes, all cyclones have been assigned a CE number and listed in DELTA. Proper use and maintenance of the cyclones impacts only the amount of product recovered and in no way affects the compliance status of the final filter baghouse units. This is demonstrated by the fact that the following wood milling equipment emission groups do not have cyclones operated in series with the fabric filters: GP006, GP009 and GP011.

3.3 Indoor Air Quality and Capture Efficiency

As indicated previously, shavings generated by the wood milling operations are collected pneumatically and routed to various cyclone/filter baghouse units depending on the specific group the wood milling equipment is contained in. There are several hundred collection points associated with wood milling equipment throughout the pneumatic collection system. Because the collection points are defined as hoods, whereby captured emissions are controlled by the filter baghouses, it was necessary to determine the capture efficiency for the collection points in order to accurately account for all generated emissions.

Specific requirements for performing a hood certification are detailed in Minn. R. 7011.0070, Listed Control Equipment and Control Equipment Efficiencies. However, because of the unique arrangement of wood milling equipment and collection points at the Facility, it is not feasible to

follow the requirements of Minn. R. 7011.0070 for hood certification. The Facility has over 250 pieces of wood milling equipment with associated wood shavings collection points. In general, very few pieces of equipment are operated concurrently at any given time. Because of the specialized nature of manufacturing performed at the Facility, a large variety of specialty wood milling devices are installed, but sit idle until needed for specialized milling requirements. Wood shavings collection points at each wood milling device are equipped with closeable vents to restrict air flow when the devices are not in use. Because of the large number of collection points, as well as the many combinations of active collection points, a hood certification as described by Minn. R. 7011.0070 would be very difficult, costly and time consuming.

Therefore, in lieu of hood certification requirements, the Facility has performed an indoor air quality monitoring analysis to estimate the amount of un-captured wood shavings emissions associated with operation of the wood milling equipment.

Twelve total suspended particulate (TSP) indoor air samples were taken throughout the three buildings that contain wood milling equipment. During the sampling period, wood milling equipment located near each sampling location was operated under normal conditions. Seven of the twelve air samples indicated results that were at or below the test method detection limit, therefore the sample result for these samples was assumed equal to the detection limit.

The sample results were statistically evaluated to develop a maximum potential concentration value at a 95% confidence interval. The statistically corrected maximum potential concentration value was determined to be 0.39 mg/m^3, which is 2 times higher than the maximum measured sample result. To provide further conservatism, the statistically corrected concentration value was adjusted to account for the difference in actual airflow versus design airflow of the collection system. For example, using the concentration value of 0.39 mg/m^3 and the general building ventilation rate of 10,620 m^3/min (375,000 cfm) for the three buildings tested yields an emission rate of 0.55 lb/hr. However, the actual collection system airflow rate during the test was 292,100 cfm. Multiplying the calculated emission rate by the ratio of the design collection system airflow rate to the actual collection system airflow rate results in a final TSP emission factor of 0.50 mg/m^3 (2.19E-04 gr/ft^3). Table 8 provides a summary of the tested and statistically adjust emission rates.

Table 8. Indoor Air Quality TSP Sample Results.

Sample Location	**Result (mg/m^3)**	**Notes**
Building 1 Average	0.10	Average of 2 tests.
Building 2 Average	0.15	Average of 3 tests.
Building 4 Average	0.11	Average of 7 tests.
Minimum Sample Result (detection limit)	0.097	Seven of the 12 tests indicated results less than the detection limit. Therefore the diction limit was used as a conservative minimum concentration.
Maximum Sample Result	0.19	Maximum value from 12 tests.
Maximum Potential Concentration	0.39	Statistically generated at a 95% confidence level based on the 12 tests.
Final Potential Concentration	**0.50**	**Maximum potential concentration adjusted to reflect actual airflow rates to provide a conservative safety factor of approximately 28%.**

The final statistically corrected and adjusted TSP emission factor of 0.50 mg/m^3 (2.19E-04 gr/ft^3) is a conservative value that accounts for minor variations in particulate emissions generated from different types of wood milling equipment. On a facility-wide basis the total estimated potential non-captured TSP emissions are approximately 0.70 lb/hr for all wood milling equipment.

During the TSP sampling event, three samplers were equipped with PM_{10} collection devices. All three PM_{10} collection devices indicated results that were below the test method detection limit of the equipment. Following the same calculation procedure as used for the TSP emissions, the PM_{10} detection limit was doubled and then adjusted for actual collection system airflow. The final PM_{10} emission factor was calculated as 0.36 mg/m^3 (1.56E-04 gr/ft^3). On a facility-wide basis the total estimated potential non-captured PM_{10} emissions are approximately 0.50 lb/hr for all wood milling equipment.

Assuming a fabric filter control efficiency of 99 percent, the uncontrolled emissions from the fabric filter would be 0.2 gr/ft^3. Compared to the conservative non-captured PM_{10} emission factor of 1.56E-04 gr/ft^3, the capture efficiency is estimated to be greater than 99 percent. Because of the high capture efficiency and the fact that non-captured emissions are vented out of general facility ventilation stacks as opposed to wood milling equipment stacks (and therefore have no bearing on the compliance status of the fabric filters and associated BACT limits), the non-captured emissions are considered negligible. The negligible non-captured PM/PM_{10} emissions have been quantified and included in the total facility potential to emit listed in Table 2.

There is no specific approved method available for determining non-captured emissions through indoor air quality testing and many approaches could be used. However, it is felt that the above described analysis provides enough conservative assumptions to demonstrate that non-captured emissions can be classified as negligible. Because, of the potential for changes in wood milling equipment and operation practices, the operating permit contains a condition to re-evaluate the indoor air quality testing once during the term of the permit to demonstrate that non-captured emissions remain negligible.

3.4 Previous Permit Limits

Several changes have taken place at the facility since the issuance of the last total facility permit, Air Emission Permit No. 1001A-93-OT-1. Changes include removal of numerous existing sources, reconfiguring of exhaust stacks, and installation of new sources. The following paragraphs provide details relating to the facility changes.

<u>GP001, GP009 and GP011, Wood Milling Equipment</u>

Wood milling equipment groups GP001, GP009 and GP011 were previously identified as SH-050, SH-049 and SH-052 in Air Emissions Permit No. 1001A-93-OT-1. The groups are controlled by fabric filters. The three sources, along with SH-051 and SH-052 were subject to a 5,400 hour per year limit of venting to the outside in order to net out of PSD in a previous modification when SH-049, SH051, SH-052 and SH053 were installed. However, because SH-051 and SH-052 were never installed, the 5,400 hour per year external venting limit was removed in the current operating permit. This limit is no longer necessary to limit emissions in order to avoid classification as major modification under PSD. Furthermore, the air flow capacities of GP009 and GP011 were modified to reflect equivalent emissions as calculated for the previous

modification. Table 9 provides a summary of the air flows and emission rates to demonstrate equivalency.

Table 9. Baghouse Air Flow Rates.

Previous Emission Point Number	Previous Flowrate (acfm)	Grain Loadling Limit (gr/scf)	Previous Emission Rate @ 5,400 hrs (tpy)	Current Emission Group I.D.	Current Flowrate (acfm)	Current Emission Rate @ 8,760 hrs (tpy)
7	115,300	0.002	5.34	GP009	140,849	10.58
8	115,300	0.002	5.34	NA	NA	NA
9	115,300	0.002	5.34	GP011	140,849	10.58
10	115,300	0.002	5.34	NA	NA	NA
Totals			**21.36 tpy**			**21.16 tpy**

<u>EU010, Magna Spray Booth</u>

EU010, Magna Spray Booth, was originally permitted and installed as part of a group with the Overhead Line 1st Top Coat (old E.P. #33) and Overhead Line 2nd Top Coat (old E.P. #31). The installation was major for PSD and required a BACT limit of 35.4 lb VOC/hr for EU010 and an overall group annual emission limit of 86.5 tons VOC per year. Since the time of installation, both Overhead Line 1st Top Coat and Overhead Line 2nd Top Coat have been removed. Additionally, EU010 has been converted to a total enclosure spray booth with its two previous emission stacks (SB010 and SB012) combined into one single emission stack (SV018). The coating has also been reformulated with a lower VOC content.

As part of the Title V Operating Permit review, the BACT analysis revisited to address the applicability of the group emission limit to removed sources. Addendum I to the Air Quality Control Technology Analysis, September 11, 1992 was reviewed to determine the basis for the original BACT emission limits. It was determined that the original BACT analysis considered the separate emission rates from each emission unit. The overall combined, or group, BACT limit was applied to multiple emission units solely for convenience. Furthermore, the final BACT determination was the use of low VOC water-based paint products, which are currently in use. Based on the review of the previous BACT analysis it is appropriate to reduce the annual BACT limit of 86.5 tons VOC per year to 30 tons per year to account for sources that have since been removed from service.

Furthermore, because of coating changes and reduction in VOC content since the 1992 BACT analysis, the maximum PTE for EU010 is now 6.5 lbs/hr. Because the maximum PTE of 6.5 lb/hr is well below the short term limit of 35.4 lb/hr, the limit will never be exceeded. Therefore, no hourly recordkeeping or testing requirements have been included in the operating permit for VOC from EU010. However, the operating permit does contain conditions for recording and maintaining records of the VOC content of the coatings used to demonstrate that the PTE remains well below the limit of 35.4 lb/hr.

Particulate matter emissions are based on the maximum solids content of the coating material and maximum spray gun capacity. Incorporating the control efficiency of the panel filters and performance testing assures compliance with the particulate matter limit. Daily inspections and recordkeeping of coating materials has been proposed to demonstrate compliance.

EU016-EU023 Diesel Generators

Several standby diesel-fired electrical generators are installed throughout the facility. All of the generators are limited to 600 hours per year annual operation. Because the generators were included in a past dispersion modeling analysis for PM, PM_{10} and ozone (VOC), maximum PTE emission rates as reported by the manufacturer were inappropriately incorporated into Air Emissions Permit No. 1001A-93-OT-1, as Title I conditions.

The 600 hour per year annual operation limit was maintained in the Title V Operating Permit as a Title I Condition, because operational limitations were utilized in the dispersion modeling analysis. The short term emission limitations were based on maximum uncontrolled potential emission rates as reported by the generator manufacturer. Because the generators were modeled using their maximum uncontrolled potential to emit, there is no need to apply a federally enforceable emission limitation to maintain the emission rates.

The generators are subject to Minn. R. 7011.2300, subp. 2, Standards of Performance for Stationary Internal Combustion Engines, which has a maximum SO_2 limitation of 0.5 lb/MMBtu. All generators combust distillate oil. The largest generator on site is 7.5 MMBtu/hr (1072 hp) and has a SO_2 emission rate of 1.47 lb/hr (0.196 lb/MMBtu). Based on this analysis of the largest generator on site, all generators will be in compliance with the SO_2 emission limitation as a result of the fuel use requirement limiting the generators to the combustion of distillate oil.

As there are no specific short-term emission limitations for the generators, which are limited to 600 hours per year operation, performance testing requirements have not been included in the current operating permit.

EU035-EU037 and EU039, Wood Treatment Operations

Currently EU036 and EU039 have a VOC BACT limit of 19.6 lb/hr and a 687 tpy VOC (wood preservative) usage limit based on a daily rolling sum. EU035 and EU037 had a separate VOC usage limit of 419 tpy in order to avoid classification as a major modification under 40 CFR § 52.21 and Minn. R. 7007.3000. The calculation methodology for Volatile Organic Compounds (VOC) from wood treatment operations was modified and corrected in Amendment No. 6 to Air Emission Permit No. 1001A-93-OT-1. The technical support document detailing the wood treatment calculations has been included as Attachment 2. These limits remain in effect in the Title V Operating Permit except that the facility has lowered the VOC usage limit of 419 tpy to 182 tpy due to operational changes.

EU040 and EU042, Wood Bead Primer and Associated Oven

EU040 and EU042, Wood Bead Primer #1 and Wood Bead Primer Oven, respectively, were originally permitted and installed as part of a group with P2 Prime Line No. 1 (old E.P. #35) and P2 Prime Line No. 1 Oven (old E.P. #48). The installation was major for PSD and required a group annual BACT VOC emission limit of 82.9 tons VOC per year. Since the time of installation, both P2 Prime Line No. 1 sources have been removed. Because of the removal of associated group sources, the annual VOC emission limit of 82.9 tons per year was reevaluated.

As part of the Title V Operating Permit review, the BACT analysis revisited to address the applicability of the group emission limit to removed sources. Addendum I to the Air Quality

Control Technology Analysis, September 11, 1992 was reviewed to determine the basis for the original BACT emission limits. It was determined that the original BACT analysis considered the separate emission rates from each emission unit. The overall combined, or group, BACT limit was applied to multiple emission units solely for convenience. Furthermore, the final BACT determination was the use of low VOC water-based paint products, which are currently in use. Based on the review of the previous BACT analysis it is appropriate to reduce the annual BACT limit of 82.9 tons VOC per year to 38 tons per year to account for sources that have since been removed from service. Furthermore, EU042, the Wood Bead Primer Oven, is a steam oven that generates no emissions. All emissions from VOC usage are resultant from EU040. Therefore, only EU040 maintains the BACT emission limitation.

EU045-EU049, Water-Based Priming Processes

In 1997 several water-based priming process were installed to replace decommissioned top-coat processes discussed previously. The water-based priming processes consisted of: EU045, Prime Line No. 2; EU046, Prime Line No. 2 Oven; EU047, 3-Stage Fan Coater; EU048, 3-Stage Fan Coater Oven; and EU049, Overhead Hand Spray Line. The two curing ovens, EU046 and EU048 are steam powered and do not directly generate air emissions. The ovens are included as emission units only in the sense that as the primer is curing, some VOC emissions will be generated at this location. All potential emissions are attributed to, and calculated from, EU045, EU047, and EU049 as part of the primer application process.

An air emissions permit amendment application addressing the installation of the water-based priming processes was submitted to the MPCA in December, 1996. Because calculated controlled emission were less then PSD significant emission increase thresholds, the proposed modification was classified as a minor amendment. Subsequent review of the application materials by MPCA staff resulted in questions concerning inclusion of control efficiencies in potential emission calculations and the potential for emission credits generated by the past removal of other emission units. Resulting discussions between Marvin Windows and MPCA staff concluded that the proposed modification, when incorporating past emission reductions, would be classified as an insignificant modification. The minor amendment application was withdrawn by Marvin Windows and the modification was completed as an insignificant modification.

During processing of the Title V (40 CFR § 70) Operating Permit application in February of 2003, it was discovered by MPCA staff that previous PM/PM_{10} emission calculations for EU045 and EU049, as part of the insignificant modification, were incorrect. The PM/PM_{10} emission calculations were based on the fact that EU045 and EU049 were total enclosures with an associated capture efficiency of 100 percent. However, during the site inspection that was performed as part of the Title V Operating Permit process, it was discovered that EU045 and EU049 were not total enclosures. Therefore, the use of a capture efficiency of 100 percent for the PM/PM_{10} emission calculations was incorrect.

Because recalculated PM/PM_{10} emissions incorporating the correct 80/20 percent capture efficiency for a hood resulted in emissions greater than the PSD significant emission increase thresholds, an Administrative Penalty Order (APO) was issued on June 6, 2003 to address incorrect modification classification. The APO required a backwards-looking Best Available Control Technology (BACT) review as well as the installation of total paint booth enclosures for EU045 and EU049. EU047, the 3-Stage Fan Coater was not included in the APO because this emission unit utilizes a non-atomized primer application that does not generate particulate

emissions. Marvin Windows completed all corrective actions required by the APO and notified the MPCA on July 8, 2003. The MPCA acknowledged Marvin Windows' completion of the corrective actions in a letter dated September 16, 2003.

Resulting PM/PM_{10} BACT limits for EU045 and EU049 were 1.91 tons per year and 2.72 tons per year, respectively. Emissions calculations were based on a total enclosure capture efficiency of 100 percent, transfer efficiencies of 90 percent for EU045 and 15 percent for EU049. Potential VOC emissions generated by the water-based primer processes were determined to less than the PSD significant increase threshold and therefore considered a minor modification with respect to 40 CFR § 52.21. Because of the low-level of emissions and resulting synthetic minor status once controls were applied, specific performance testing was not required in the current operating permit. Instead, monitoring and recordkeeping of product usage and material content, and inspection of control equipment was used as a compliance tracking mechanism.

<u>EU321-EU323: P2 Prime Line No. 3 (EU 321 and EU 322) and Munt Primer No. 2 (EU323)</u>

EU321-EU322 were installed as part of a minor modification dated April 22, 2003. Since then, EU323 was removed from service.

3.5 Calculations of Potential to Emit

Attachment 3 to this TSD contains detailed calculation spreadsheets and supporting information, which summarizes the PTE of the Facility.

In addition to the calculation spreadsheets, the following information has been provided concerning wood treatment preservative products used at the Facility. The Facility uses a wood preservative product. The wood preservative consists of a mineral spirits base and a concentrate. The wood preservative is used in several different operations comprised of the following: EU035, KD Dip System; EU036, Dip Dry System; EU037, Departmental Dip Containers; and EU039, Round Tops Dip System.

Using the maximum HAP concentration in conjunction with the annual limit of wood preservative usage for the Facility it was possible to calculate total potential HAP emissions.

3.6 Periodic Monitoring

In accordance with the /Clean Air Act, it is the responsibility of the owner or operator of a Facility to have sufficient knowledge of the Facility to certify that the Facility is in compliance with all applicable requirements.

In evaluating the monitoring included in the permit, the MPCA considers the following:

- The likelihood of violating the applicable requirements;
- Whether add-on controls are necessary to meet the emission limits;
- The variability of emissions over time;
- The type of monitoring, process, maintenance, or control equipment data already available for the emission unit;
- The technical and economic feasibility of possible periodic monitoring methods; and,

- The kind of monitoring found on similar units elsewhere.

Table 10 summarizes the periodic monitoring requirements for those emission units for which the monitoring required by the applicable requirement is nonexistent or inadequate.

Table 10. Emission Units Subject to Periodic Monitoring

GP/EU/CE	Emission Limit (Basis)	Additional Monitoring	Discussion
GP001-006, 009, 011 and 021	a.) PM: ≤0.3 gr/dscf Opacity:≤20% (Minn. R. 7011.0715)	a.) Operation of control equipment (see GP 022)	a.) Based on control equipment requirements and limits, no visible emissions are anticipated and compliance is reasonably expected.
GP012	a.) TSP/PM_{10}:≤0.1 lb/MMBtu (40 CFR § 52.21) b.) Fuel: wood only (Minn. R. 7007.0800)	a.) Performance Testing. c.)Recordkeeping	a.) Performance test due before end of each 60 months following permit issuance. c.) Maintain monthly records of fuel use.
GP013	a.) TSP: ≤0.3 gr/dscf (unless required to further reduce emissions to comply with the less stringent of either Minn. R. 7011.0730 or Minn. R. 7011.0735) (Minn. R. 7011.0715) b.) Opacity:≤20% (Minn. R. 7011.0715)	a.) NA b.) NA	a.) & b.) Primer ovens are steam heated. Stack is only to vent emissions from VOC curing. All emissions accounted for at application point prior to ovens. No periodic monitoring required.
GP014	a.) SO_2: ≤0.5 lb/MMBtu (Minn. R. 7011.2300) b.) Opacity:≤20% (Minn. R. 7011.2300) c.) Fuel: distillate oil d.) Operating Hours: ≤600 hours/year (40 CFR § 52.21)	a.) NA b.) NA c.) NA d.)Recordkeeping	Generators are limited to distillate oil. Theoretical emission calculations indicate maximum PTE of 0.196 lb/MMBtu. No periodic monitoring required. b.) Based on fuel type no visible emissions are anticipated and compliance is reasonably expected. Therefore, no monitoring has been proposed. c.) Emission units combust distillate oil only by design. Monitoring not necessary. d.) Monthly recordkeeping of hours of operation.
GP015	a.) SO_2: ≤0.5 lb/MMBtu	a.) NA	a.) Generators are limited to distillate oil. Theoretical emission

GP/EU/CE	Emission Limit (Basis)	Additional Monitoring	Discussion
	(Minn. R. 7011.2300)		calculations indicate maximum PTE of 0.196 lb/MMBtu. No periodic monitoring required.
	b.) Opacity:≤20% (Minn. R. 7011.2300)	b.) NA	b.) Based on fuel type no visible emissions are anticipated and compliance is reasonably expected. Therefore, no monitoring has been proposed.
	c.) Fuel: distillate oil	c.) NA	c.) Emission units combust distillate oil only by design. Monitoring not necessary.
	d.) Operating Hours: ≤600 hours/year (40 CFR § 52.21)	d.)Recordkeeping	d.) Monthly recordkeeping of hours of operation.
GP016	a.) SO_2: ≤0.5 lb/MMBtu (Minn. R. 7011.2300)	a.) NA	a.) Generators are limited to distillate oil. Theoretical emission calculations indicate maximum PTE of 0.196 lb/MMBtu. No periodic monitoring required.
	b.) Opacity:≤20% (Minn. R. 7011.2300)	b.) NA	b.) Based on fuel type no visible emissions are anticipated and compliance is reasonably expected. Therefore, no monitoring has been proposed.
	c.) Fuel: distillate oil	c.) NA	c.) Emission units combust distillate oil only by design. Monitoring not necessary.
	d.) Operating Hours: ≤600 hours/year (40 CFR § 52.21)	d.)Recordkeeping	d.) Monthly recordkeeping of hours of operation.
GP017	a.) Preservative Usage ≤ 182 tons per year (limit to avoid 40 CFR § 52.21)	a.)Recordkeeping: 356-day rolling sum.	a.) Annual usage limit will be monitored based on daily 365-day rolling sum calculations.
GP018	a.) Preservative Usage ≤ 687 tons per year (limit to avoid 40 CFR § 52.21)	a.)Recordkeeping: 356-day rolling sum.	a.) Annual usage limit will be monitored based on daily 365-day rolling sum calculations.
GP019	a.) VOC: ≤19.6 lb/hr (40 CFR § 52.21)	a.) Monitoring at Control Equipment	a.) Compliance with emission limitation is based on monitoring and calculations performed for control equipment.
GP020	a) PM/PM_{10} (Minn. R. 7007.0800	a) Performance Testing	a) Performance testing requirements verify compliance.

GP/EU/CE	Emission Limit (Basis)	Additional Monitoring	Discussion
	and Minn. R. 7017.2020)		
GP022	$PM/PM_{10} \leq 0.002$ gr/dscf (40 CFR § 52.21 and Minn. R. 7007.0300)	Recordkeeping of operation, maintenance and inspection of equipment, performance testing (see GP020)	Monitoring based on Minnesota Performance Standard for Control equipment is adequate for reasonable assurance of compliance (daily and periodic inspections, corrective actions, O&M).
SV 018	a) PM/PM_{10} (Minn. R. 7007.0800 and Minn. R. 7017.2020) (See EU010)	a) Performance Testing	a) Performance testing requirements verify compliance.
EU010	a.) TSP/PM_{10}:≤0.18 lb/hr (see SV 018) VOC:≤35.4 lb/hr VOC: ≤30.0 tpy (40 CFR § 52.21) b.) Opacity:≤20% (Minn. R. 7011.0715)	a.)Recordkeeping: 365-day rolling sum. Daily records of coating usage, on-going MSDS records b.) NA	a.) PTE calculations based on current worst-case coating and equipment capacity show the PTEs for all limited pollutants are under the permit limits. Therefore, recordkeeping, daily inspections and emissions calculations based on usage and performance testing requirements are considered reasonable periodic monitoring for this unit. b.) Based on emission unit type no visible emissions are anticipated. No periodic monitoring is proposed.
EU012	a.) TSP:≤0.4 lb/MMBtu (Minn. R. 7011.0550) b.) Opacity:≤20% (Minn. R. 7011.0515) c.) Fuel: wood only (Minn. R. 7007.0800)	a.) Performance Test b.) NA c.)Recordkeeping	a.) A 1994 performance test for both PM and PM_{10} shows results at roughly 75% of the rule limit. Per MPCA policy, this dictates a re-occurring testing frequency of every 36 months for this unit. b.) Based on fuel type no visible emissions are anticipated and compliance is reasonably expected. Therefore, no monitoring has been proposed. c.) Monthly recordkeeping of fuel use.
EU013	a.) TSP:≤0.4 lb/MMBtu (Minn. R. 7011.0550)	a.) & b.) NA	a.) & b.) Unit combusts natural gas and propane; therefore, the likelihood of violating either of the emission

GP/EU/CE	Emission Limit (Basis)	Additional Monitoring	Discussion
	b.) Opacity:≤20% (Minn. R. 7011.0515) c.) Fuel: natural gas or propane only. (Minn. R. 7007.0800)	 c.)Recordkeeping	limits is very small. The Permittee can demonstrate that this unit will continue to operate such that emissions are well below the emission limits by only burning natural gas. Since this is a permit condition, the semi-annual deviations report will document any deviations from this condition. c.) Monthly recordkeeping of fuel use.
EU014	See GP012	NA	NA
EU015	See GP012	NA	NA
EU035	See GP017	NA	NA
EU036	See GP018	NA	NA
EU039	See GP018	NA	NA
EU040	a.) VOC:≤38 tpy (Water based coating requirement) (40 CFR § 52.21)	a.)Recordkeeping: 365-day rolling sum. Daily records of coating usage, on-going MSDS records	a.) PTE calculations based on current worst-case coating and equipment capacity show the PTEs for all limited pollutants are significantly under the permit limits. Due to coating reformulation and removal of other sources in previous group, potential VOC emissions are approximately 11 percent of limit. Therefore, recordkeeping and emissions calculations based on usage are considered reasonable periodic monitoring for this unit.
EU045	a.) TSP: ≤ 0.3 gr/dscf (unless required to further reduce emissions to comply with the less stringent of either Minn. R. 7011.0730 or Minn. R. 7011.0735) (Minn. R. 7011.0715) b.) PM_{10}:≤1.91 tpy (40 CFR § 52.21) c.) Opacity:≤20% (Minn. R. 7011.0715)	a.)Recordkeeping b.)Recordkeeping c.) NA	a.) PTE calculations based on current worst-case coating and equipment capacity show the PTEs for all limited pollutants are significantly under the permit limits. Therefore, recordkeeping and emissions calculations based on usage are considered reasonable periodic monitoring for this unit. b.) Daily recordkeeping of material usage and emission calculations. c.) Based on emission unit type no visible emissions are anticipated. No periodic monitoring is proposed.

GP/EU/CE	Emission Limit (Basis)	Additional Monitoring	Discussion
EU047	a.) TSP: ≤ 0.3 gr/dscf (unless required to further reduce emissions to comply with the less stringent of either Minn. R. 7011.0730 or Minn. R. 7011.0735) (Minn. R. 7011.0715) b.) Opacity:≤20% (Minn. R. 7011.0715)	a.) NA b.) NA	a.) non-atomized application results in negligible PM/PM_{10} emissions. b.) Based on emission unit type no visible emissions are anticipated. No periodic monitoring is proposed.
EU049	a.) TSP:≤0.3 gr/dscf (unless required to further reduce emissions to comply with the less stringent of either Minn. R. 7011.0730 or Minn. R. 7011.0735) (Minn. R. 7011.0715) b.) PM_{10}:≤2.72 tpy (40 CFR § 52.21) c.) Opacity:≤20% (Minn. R. 7011.0715)	a.)Recordkeeping b.)Recordkeeping c.) NA	a.) PTE calculations based on current worst-case coating and equipment capacity show the PTEs for all limited pollutants are significantly under the permit limits. Therefore, recordkeeping and emissions calculations based on usage are considered reasonable periodic monitoring for this unit. b.) Daily recordkeeping of material usage and emission calculations. c.) Based on emission unit type no visible emissions are anticipated. No periodic monitoring is proposed.
EU321	a.) TSP:≤0.3 gr/dscf (unless required to further reduce emissions to comply with the less stringent of either Minn. R. 7011.0730 or Minn. R. 7011.0735) (Minn. R. 7011.0715) b.) Opacity:≤20% (Minn. R. 7011.0715)	a.)Recordkeeping b.) NA	a.) PTE calculations based on current worst-case coating and equipment capacity show the PTEs for all limited pollutants are significantly under the permit limits. b.) Based on emission unit type no visible emissions are anticipated. No periodic monitoring is proposed.
CE001	a.) Exhaust Flow: ≤91,800 acfm (40 CFR § 52.21)	a.)Recordkeeping	a.) Maintain records of baghouse blower capacity. The fabric filter exhaust flow capacity limit applies to all emission units controlled by this control device. The permittee shall keep the fabric filter design

GP/EU/CE	Emission Limit (Basis)	Additional Monitoring	Discussion
			specifications showing the calculated maximum airflow on-site.
	b.) Performance testing (Minn. R. 7007.0800)	b.) See GP 020	b) Performance testing verifies compliance.
CE003	a.) Exhaust Flow: ≤76,500 acfm (40 CFR § 52.21)	a.)Recordkeeping	a.) Maintain records of baghouse blower capacity. The fabric filter exhaust flow capacity limit applies to all emission units controlled by this control device. The permittee shall keep the fabric filter design specifications showing the calculated maximum airflow on-site.
	b.) Performance testing (Minn. R. 7007.0800)	b.) See GP 020	b) Performance testing verifies compliance.
CE005	a.) Exhaust Flow: ≤46,000 acfm (40 CFR § 52.21)	a.)Recordkeeping	a.) Maintain records of baghouse blower capacity. The fabric filter exhaust flow capacity limit applies to all emission units controlled by this control device. The permittee shall keep the fabric filter design specifications showing the calculated maximum airflow on-site.
	b.) Performance testing (Minn. R. 7007.0800)	b.) See GP 020	b) Performance testing verifies compliance.
CE007	a.) Exhaust Flow: ≤61,200 acfm (40 CFR § 52.21)	a.)Recordkeeping	a.) Maintain records of baghouse blower capacity. The fabric filter exhaust flow capacity limit applies to all emission units controlled by this control device. The permittee shall keep the fabric filter design specifications showing the calculated maximum airflow on-site.
	b.) Performance testing (Minn. R. 7007.0800)	b.) See GP 020	b) Performance testing verifies compliance.
CE009	a.) Exhaust Flow: ≤115,300 acfm (40 CFR § 52.21)	a.)Recordkeeping	a.) Maintain records of baghouse blower capacity. The fabric filter exhaust flow capacity limit applies to all emission units controlled by this control device. The permittee shall keep the fabric filter design specifications showing the calculated

GP/EU/CE	Emission Limit (Basis)	Additional Monitoring	Discussion
	b.) Performance testing (Minn. R. 7007.0800)	b.) See GP 020	maximum airflow on-site. b) Performance testing verifies compliance.
CE011	a.) Control Efficiency: 95% (to avoid 40 CFR § 52.21) b.) Operating Practices (to avoid 40 CFR § 52.21) c.) Performance testing (Minn. R. 7007.0800)	a.)Recordkeeping b.)Recordkeeping c.) Performance testing.	a.) & b.) Daily monitoring and continuous recording of operating parameters satisfies monitoring requirements. b) Performance testing requirements verify compliance and provide appropriate parameters for future periodic monitoring requirements.
CE019	a.) Exhaust Flow: ≤57,600acfm (40 CFR § 52.21) b.) Performance testing (Minn. R. 7007.0800)	a.)Recordkeeping b.) See GP 020	a.) Maintain records of baghouse blower capacity. b) Performance testing verifies compliance.
CE020	a.) Exhaust Flow: ≤140,849 acfm (to avoid 40 CFR § 52.21) b.) Performance testing (Minn. R. 7007.0800)	a.)Recordkeeping b.) See GP 020	a.) Maintain records of baghouse blower capacity. b) Performance testing verifies compliance.
CE021	a.) Exhaust Flow: ≤140,849 acfm (to avoid 40 CFR § 52.21) b.) Performance testing (Minn. R. 7007.0800)	a.)Recordkeeping b.) See GP 020	a.) Maintain records of baghouse blower capacity. b) Performance testing verifies compliance.
CE060	a.) Exhaust Flow: ≤72,440 acfm (40 CFR § 52.21) b.) Performance testing (Minn. R. 7007.0800)	a.)Recordkeeping b.) See GP 020	a.) Maintain records of baghouse blower capacity. b) Performance testing verifies compliance.
CE063	PM/PM_{10}≤0.002 gr/dscf Exhaust Flow: ≤250,000 acfm (40 CFR § 52.21)	Recordkeeping of operation, maintenance and inspection of equipment	Monitoring based on Minnesota Performance Standard for Control equipment is adequate for reasonable assurance of compliance (daily and periodic inspections, corrective actions, O&M).

GP/EU/CE	Emission Limit (Basis)	Additional Monitoring	Discussion
	(40 CFR § 52.21 and Minn. R. 7007.0300)		
TK001	a.) Permanent Fill Pipe (Minn. R. 7011.1505) b.) 40 CFR § 60.116b(b)	a.) NA b.) NA	a.) By design b.) Records of tank capacity kept on-site.
TK002	a.) Permanent Fill Pipe (Minn. R. 7011.1505) b.) 40 CFR § 60.116b(b)	a.) NA b.) NA	a.) By design b.) Records of tank capacity kept on-site.

3.7 Insignificant Activities

The permit is required to include periodic monitoring for all emissions units, including insignificant activities if necessary, per EPA guidance. The insignificant activities at this Facility are only subject to general applicable requirements. Table 11 documents the justification why no additional periodic monitoring is necessary for the current insignificant activities, and likely future ones, that might be located at this site. See Attachment 4 of this TSD for PTE information for the insignificant activities.

Table 11. Insignificant Activities.

Insignificant Activity	Currently on site? (Y/N)	General Applicable Emission limit	Discussion
Space heaters fueled by kerosene, natural gas or propane	Y	PM, variable depending on airflow Opacity ≤ 20% with exceptions (Minn. R. 7011.0610)	For these units based on the fuels used and published emissions factors, it is highly unlikely that they could violate the applicable requirement. These units are vented inside a building, so testing is not feasible.
Fuel use in furnaces or boilers with a capacity of less than 500,000 Btu/hr.	Y	PM ≤ 0.4 lb/MMBtu Opacity ≤ 20 % (Minn. R. 7011.0610)	For these units based on the fuels used and EPA published emissions factors, it is highly unlikely that they could violate the applicable requirement. In addition, these units are operated and vented inside a building, so testing for PM or opacity is not feasible.
Infrared electric ovens	Y	Opacity ≤ 20% (Minn. R.	While no emissions estimation method exists for these units, based on general knowledge of how they operate, it is

Insignificant Activity	Currently on site? (Y/N)	General Applicable Emission limit	Discussion
		7011.0110)	highly unlikely that they could generate visible emissions. In addition, these units would be operated and vented directly into the building, so monitoring or testing is not feasible.
Emissions from laboratory operations, as defined in Minn. R. 7007.1300, subp. 3(G)	Y	PM, variable depending on airflow Opacity ≤ 20% (Minn. R. 7011.0715)	These are very small, intermittent, bench-top operations that typically do not even have any emissions. It is highly unlikely that they could violate the applicable requirement.
Brazing, soldering or welding equipment	Y	PM, variable depending on airflow Opacity ≤ 20% (Minn. R. 7011.0715)	For these units, based on EPA published emissions factors, it is highly unlikely that they could violate the applicable requirement. In addition, these units are operated and vented inside a building, so testing for PM or opacity is not feasible.
Blueprint copiers and photographic processes	Y	Opacity ≤ 20% (Minn. R. 7011.0110)	While no emissions estimation method exists for these units, based on general knowledge of how they operate, it is highly unlikely that they could generate visible emissions. In addition, these units would be operated and vented directly into the building, so monitoring or testing is not feasible.
Infrequent use of spray paint equipment for routine housekeeping or plant upkeep activities	Y	PM, variable depending on airflow or process weight rate Opacity ≤ 20% (Minn. R. 7011.0715)	While spray equipment will have the potential to emit particulate matter, these particular activities are those not associated with production, so they would be infrequent and usually occur outdoors. Testing or monitoring is not feasible.
Above ground fuel oil storage tanks with a combined total tank capacity less than 100,000 gallons;	Y	NA	These units consist of diesel-fired electrical generator fuel tanks. The tank capacity and annual throughput is small enough to result in negligible VOC emissions.
Fugitive dust emissions from unpaved entrance roads and parking lots, except from a	Y	Prevent Particulate Matter from Becoming Airborne (Minn. R.	The operating permit requires the application of dust suppressant. Based on calculations provided by the Permittee, the generation of avoidable amounts of

Insignificant Activity	Currently on site? (Y/N)	General Applicable Emission limit	Discussion
stationary source applying for an Option D registration permit under part 7007.1130.		7011.0150)	particulate matter will not occur.
Individual units that have potential emissions of less than 2,000 lb/yr of various criteria pollutants.	Y	PM ≤ 0.4 lb/MMBtu Opacity ≤ 20 % (Minn. R. 7011.0515) or PM, variable depending on airflow Opacity ≤ 20% (Minn. R. 7011.0715)	These units consist of: shavings loading auger backup system, flax shive building, sawdust storage bin, carbon regen cooling tower, remediation bioreactor, bulk mineral spirits storage, RT dump tank, mix tank, dip dry dump tank, and recovered mineral spirits. Based on calculations provided by the Permittee (see Attachment 4), it is highly unlikely that they could violate the applicable requirement. In addition, these units are operated and vented inside a building, so testing for PM or opacity is not feasible.
Individual units that have potential emissions of less than 2.28 lb/hr of various criteria pollutants and less than certain thresholds of HAPs.	Y	PM ≤ 0.4 lb/MMBtu Opacity ≤ 20 % (Minn. R. 7011.0515) or PM, variable depending on airflow Opacity ≤ 20% (Minn. R. 7011.0715)	These units consist of printing operations, bulk preservative concentrate storage, and un-captured wood milling equipment emissions. Based on calculations provided by the Permittee (see Attachment 4), it is highly unlikely that they could violate the applicable requirement. In addition, these units are operated and vented inside a building, so testing for PM or opacity is not feasible.

The following paragraphs provide a more detailed discussion of internally vented particulate matter sources. The facility has a variety of internally vented wood milling equipment attached to barrel vac's, Torits and cartridge filter systems.

Combined (identified as EU 382), these systems have a total airflow rate of approximately 250,000 cfm and consist of small groups of wood milling equipment (three to five units) each hooked up to an air cleaning system (identified as CE 063). The internally vented control equipment is typically operated for 4,500 hours per year. Utilization of the wood milling equipment is approximately 20 percent due to the fact that the machines are used very intermittently and sit idle for long periods. Many are designed to make special cuts, or simply cut a milled piece of wood to length for a special order. Table 12 provides a summary of estimated emissions from the internally vented wood milling equipment.

Table 12. Internally Vented Equpment.

Equipment	Estimated Actual PM Emissions (TPY)		Estimated Potential PM Emissions (TPY)	
	Minimum	Maximum	Minimum	Maximum
Individual Milling Equipment	0.004	0.02	0.04	0.21
Each Torit/Barrel Vac	0.01	0.03	0.10	0.33
Each Cartridge Filter	0.09	0.10	0.83	1.00

In order to ensure that internally vented equipment does not adversely impact work place air quality, the Facility employs redundant administrative controls to ensure internally vented dust control systems remain effective. Employees are required to confirm internal emission control systems remain effective and to remove dust from the work area at the end of each shift. In addition, audits are performed to confirm that internal dust control systems remain effective.

3.8 Permit Organization

In general, the permit meets the MPCA Delta Guidance for ordering and grouping of requirements. One area where this permit deviates slightly from Delta guidance is in the use of appendices. While appendices are fully enforceable parts of the permit, in general, any requirement that the MPCA thinks should be tracked (e.g., limits, submittals, etc.) should be in Table A or B. The main reason is that the appendices are work processing sections and are not part of the tracking system. Violation of the appendices can be enforced, but the computer system will not automatically generate the necessary enforcement notices or documents. Staff must generate these.

Appendix I contains the specific calculation procedure for the wood treatment operations. These procedures are too complex to enter into Delta and must go in an Appendix.

Appendix II contains a listing of insignificant activities and applicable requirements.

Appendix III contains a listing of modeled stack parameters from a 1992 PM_{10} dispersion modeling analysis.

3.9 Comments Received

No comments were received during the comment period.

Public Notice Period: January 11, 2007 - February 9, 2007

EPA 45-day Review Period: January 11, 2007 – February 24, 2007

4. Conclusion

Based on the information provided by Marvin Windows and Doors, the MPCA has reasonable assurance that the proposed operation of the emission Facility, as described in the Air Emission Permit No. 13500002-001 and this TSD, will not cause or contribute to a violation of applicable federal regulations and Minnesota Rules. This permit is being issued under Title V issuance goals.

Staff Members on Permit Team:

Permit writer/Engineer:	HDR Engineering, Inc. under MPCA Contract A55431, Work Order No: PEHD-0505
MPCA Contracting Contact:	Steve Gorg, M.S., P.E.
Enforcement Staff:	Cary Hernandez
Peer Reviewer:	Margaret Bartz
Support Staff:	Laurie O'Brien
Data Entry:	Beckie Olson

Attachments:

1. Permit History
2. Wood Treatment Calculations
3. Potential to Emit Calculations for Criteria and Hazardous Air Pollutants
4. Insignificant Activity Calculations
5. Facility Description and CD-01

Attachment 1
Permit History

Permit Number	Permit Type	Issuance Date	Activity	Limits	Increase	Conclusion
1001-75-O-1	Operating	February 19, 1975	Operation of a mechanical collector (cyclone)	Rule limits only; unit specs listed.	No PTE given.	Later replaced.
1001-78-I-1	Installation	April 25, 1978	Installation of a boiler to burn wood waste.	None. Equipment specs listed for boiler.	Calculation present in file but not clear.	Later replaced.
Consent Decree		December 27, 1990			NA	Limits later incorporated into the TFP
Compliance Agreement		December 15, 1992			NA	Limits later incorporated into the TFP
1001A-93-OT-1	Total facility permit	January 15, 1993	see individual process groups below	See each group. All PM limits also listed for PM10.	No increase listed, but total facility PTEs listed as follows: PM/PM10 = 212 tpy SOx = 7.9 tpy NOx = 109 tpy CO = 97.3 tpy VOC = 1720 tpy	
		Operation of existing Milling equipment, plus 4 additional baghouses, optional cyclones. Can rearrange, realign, add, remove wood milling equipment.				Carried forward or replaced.
		Pt. 1 (SH-002): Bldg 4, 8 cyclones and 1 baghouse Pt. 2 (SH-004): Bldg 4, 3 cyclones and 1 baghouse Pt. 3 (SH-006): Bldg 4, 3 cyclones and 1 baghouse Pt. 4 (SH-050): Bldg 4, 2 cyclones and 1 baghouse		Pts 1, 2, 3, 4, and 6: 0.002 gr/dscf, NAAQS Pt 5: 0.002 gr/dscf 52.21(j)(2) limit Pts 7-10: 0.002 gr/dscf Statute limit.		

Permit Number	Permit Type	Issuance Date	Activity	Limits	Increase	Conclusion
		Pt. 5 (SH-009): Bldg 1, 3 cyclones and 1 baghouse Pt. 6 (SH-010): Bldg 1, 1 baghouse Pt. 7 (SH-049): TBD, cyclones and baghouse Pt. 8 (SH-051): TBD, cyclones and baghouse Pt. 9 (SH-052): TBD, cyclones and baghouse Pt. 10 (SH-053): TBD, cyclones and baghouse		5400 hours/yr as 365 day rolling sum of external venting on each of 5 systems (Pts. 4, 7, 8, 9, and 10) for netting. Minimum pressure drop of 0.1 inches of water on all baghouses.		
		Operation of existing wood treatment units plus new KD in-line treatment system; control of Round Tops and Drop Dry by carbon adsorption; raise stacks.				Carried forward or replaced.
		Pt 11 (WT-001): Bldg 1 Dip Dry, carbon adsorp. Pts 12 and 13 (WT-003 and 004): Bldg 2 emergency exhausts for round top Pts. 14 and 15 (WT-005 and 006): TBD, K-D dip Pt. 16 (WT-008): carbon adsorp. Pts. 17 and 18 (VN-296 & 297): tank farms Pt. 19 (VN-303): Bldg 1 solvent recovery tank vent Pt. 20 (VN-304): Bldg 1 mixing tank vent Pt. 21 (VN-305): Bldg 1 emergency dump tank vent		Dip Dry and Round Tops (Pts. 11 and 16) emissions limited to 19.6 lb VOC/hr total, as 365 day rolling average under 40 CFR § 52.21(j)(2) also limited to 687 tpy VOC usage based on 365 day rolling sum Pts 14 and 15 (K-D Dip) limited to 419 tpy usage (265 day rolling sum) to net out of PSD.		Carried forward or replaced.

Permit Number	Permit Type	Issuance Date	Activity	Limits	Increase	Conclusion
		Pt. 22 (VN-309): Bldg 2 round top dump tank vent		Specific operating and control limits in the permit.		
		Operation of existing coating application equipment along with a series of process changes including new dryers, and three new priming areas.				Carried forward or replaced.
				PM Limits, no averaging		Carried forward or replaced.
		Pt 23 (SB-001): Bldg 3B 2nd topcoat, Spray Booth		Pts. 23 & 25: 0.34 lb/hr, each (NAAQS)		
		Pt 24 (SB-002): Bldg 3B lacquer spray booth		24: PM 0.15 lb/hr (NAAQS)		
		Pt 25 (SB-003): Bldg 3B 1st topcoat, Spray Booth		26: 0.18 lb/hr, 52.21(j)(2)		
		Pt 26 (SB-004): Bldg 3B primer spray booth		27 & 28: 0.19 lb/hr, each (NAAQS)		
		Pt 27 (SB-005): Bldg 3B strippable coating booth		29: 0.14 lb/hr, 52.21(j)(2)		
		Pt 28 (SB-006): Bldg 3B strippable coating booth		30: 0.11 lb/hr (NAAQS)		
		Pt 29 (SB-007): Bldg 3B prime booth		31 & 33: 0.17 lb/hr, each 52.21(j)(2)		
		Pt 30 (SB-008): Bldg 3B prime booth		32 & 34: 0.09 lb/hr, each 52.21(j)(2)		
		Pt 31 (SB-009): Bldg 3B 2nd topcoat, Spray Booth		35: 0.12 lb/hr (NAAQS)		
		Pt 32 (SB-010): Bldg 3B 1st topcoat, Spray Booth		38: 0.06 lb/hr ,to avoid NSR		
		Pt 33 (SB-011): Bldg 3B 1st topcoat, Spray Booth		39: 0.32 lb/hr, to avoid NSR		
		Pt 34 (SB-012): Bldg 3B 1st topcoat, Spray Booth				

Permit Number	Permit Type	Issuance Date	Activity	Limits	Increase	Conclusion
		Pt 35 (SB-017): Bldg 7 P2 lineal prime line; water-based Pt 36 (SB-018): Bldg 7 prime, flow coater; water-based Pt 36 (SB-018): Bldg 7 prime, flow coater; water-based Pt 37 (SB-018): Bldg 7 prime, flow coater; water-based Pt 38 (SB-024): TBD. lineal prime; water-based Pt 39 (SB-025): TBD. spray prime; water-based Pts. 40-48 (OV-001 thru 009): Drying Ovens Pt. 49-53 (OV-010 thru 014): TDB drying ovens Pt. 54 (EQ-002): Planned parts washer exhaust in booth, TBD Pt. 55 (EQ-014): Recovery still vent, TBD		<u>VOC Emission Limits</u>: all 52.21 as basis, no averaging 26: 20.8 lb/hr 29: 20.8 lb/hr 31-34:17.7 lb/hr, each 35: 7.3 lb/hr 36 & 37: 1.2 lb/hr, each <u>VOC Usage Limits</u>**,** all 365 day rolling limits 26, 29, 44, 45 & 46: 77.1 tpy, 52.21(j)(2) 30: 22.0 tpy (NAAQS) 31-34: 86.5 tpy, 52.21(j)(2) 23, 25, 40-43: 93.3 tpy, NAAQS 35, 47 & 48: 82.9 tpy, 52.21(j)(2) 36 & 37: 10.1 tpy, 52.21(j)(2) 24: 131 tpy, NAAQS 38, 39, 49-53: 65.3 tpy to avoid NSR 54 & 55: 12.1 tpy, PTE		

Permit Number	Permit Type	Issuance Date	Activity	Limits	Increase	Conclusion
				Work practice requirements for painting operations as well as a requirement to use water-based materials in pts 35-39, 47 and 48		
		Operation of existing wood boilers (#3-#6); convert boiler #4 from wood to natural gas; ESP on boilers #5 and #6.				Carried forward or replaced.
		Pt 56: Kewanee Boiler #3 (15.7 MMBtu/hr) with multiclone Pt 58: Boilers 5 & 6, combined stack with ESP Boiler Flyash handling systems; series of cyclone and fabric filter Boilers 3, 5, and 6 Pt 57: Kewanee Boiler #4, 31 MMBtu/hr with gas		<u>PM Limits</u> Pt. 56: 0.4 lb/MMBtu (Minn. R. 7005.0320) Pt 58: 0.1 lb/MMBtu, 52.21(j)(2) Pts. 59 and 60: 0.1 gr/dscf (Minn. R. 7005.0520) Opacity Minn. R. limits, but for Pt 58: 20% opacity listed as part of the BACT requirement. <u>Fuel Limits</u> Pts. 56 and 58: Wood, statute Pt. 57: Natural Gas or LPG, statute		Carried forward or replaced.
		Operation of existing 10 back diesel generators. Stack height changes due to modeling. Separate PM vs. PM10 limits for these units. Permit states that limits on Pts. 65, 66, 67, and 70 are from PSD (not NAAQS).				Updated.

Permit Number	Permit Type	Issuance Date	Activity	Limits	Increase	Conclusion
		Pt 61: North GN-001 Pt 62: North GN-002 Pt 63: South GN-003 Pt 64: South GN-004 Pt 65: 3A, GN-005 Pt 66: Bldg 6, GN-006 Pt 67: second stack for GN-006 (called GN-007) Pt 68: Boiler Bldg, GN-008 Pt 69: Boiler Bldg, GN-009 Pt 70: Boiler Bldg, GN-010 Pt. 71: Corporate Office, GN-011 no 73		<u>PM Limits</u> Pts. 61, 62, 68, 69, and 73: 0.74 lb/hr, each, NAAQS Pts. 63-67: 0.27 lb/hr, each, NAAQS Pt. 71: 0.44 lb/hr, NAAQS <u>PM10 Limits</u> Pts. 61, 62, 68, 69, and 73: 0.71 lb/hr, each, NAAQS Pts. 63-67: 0.26 lb/hr, each, NAAQS Pt. 71: 0.42 lb/hr, NAAQS <u>NOx Limits</u> Pts. 61, 62, 68, 69, and 70: 13.3lb/hr, each, NAAQS Pts. 63-67: 25.7 lb/hr, each, NAAQS Pt. 71: 5.1 lb/hr, NAAQS <u>VOC Limits</u> Pts. 61, 62, 68, 69, and 70: 0.77 lb/hr, each, NAAQS Pts. 63-67: 0.22 lb/hr, each, NAAQS Pt. 71: 0.13 lb/hr, NAAQS Hours Limit: each unit limited to 600 hr/yr, based on 12 month rolling sum		
		Operation of existing shaving handling systems. Addition of a baghouse (after cyclone) on pt. 73.				Carried forward or replaced.

Permit Number	Permit Type	Issuance Date	Activity	Limits	Increase	Conclusion
				PM Limits Pt. 72: 0.100 gr/dscf, Minn. R. 7005.0520 Pt. 73: 0.40 lb/hr, NAAQS Pt. 74: 0.42 lb/hr, NAAQS Pt. 75: 0.48 lb/hr, NAAQS Pt. 77: 0.063 lb/hr, NAAQS Pt. 81: 0.10 lb/hr, NAAQS		
		Pt 72: bldg 6 grinder vent Pt 73: to be removed, bldg 4 hog with cyclone Pt74: bldg 1 shaving handling with cyclone Pt 75: bldg 1 shaving handling with cyclone Pt 76: bldg 1 RR car loading, shavings with cyclone Pt 77: bldg 1 RR car loading, hog wood Pt 78: bldg 1 truck loading, shavings (drop point) Pt 79: bldg 1, truck loading shavings (drop point) Pt 80: bldg 1 truck loading shavings (drop point) Pt 81: bldg 1 shaving bin wall vent				
		Operation of miscellaneous sources. Replacement of two welding stations, three new welding booths, and removal of two units. Separate PM vs. PM10 limits.				Carried forward or replaced.
				PM Limits Pts. 82, 83, and 94: 0.1 gr/dscf, Minn. R. 7005.0520 Pt. 86: 0.38 lb/hr, permit application		
		Pt 82: parts cleaner Pt 83: grinder vent Pt 84: maint. welding vent (to be replaced)				

Permit Number	Permit Type	Issuance Date	Activity	Limits	Increase	Conclusion
		Pt 85: maint. welding vent (to be replaced) Pt 86: engine for fire sprinkler Pt 87: edge gluer Pt 88: edge gluer (to be removed) Pt 89: maint welding booth, replaced 84 Pt 90: maint welding booth, replaced 85 Pt 91: new welding booth Pt 92: welding booth (replaces Pt 96) Pt 93: new welding booth Pt 94:scrap glass vent Pt 95: maint painting Pt 96: maint welding downdraft table (to be replaced)		<u>PM10 Limits</u> Pts. 82, 83, and 94: 0.1 gr/dscf, Minn. R. 7005, 0520 Pt. 86: 0.37 lb/hr, permit application All construction authorizations to install new units expired 18 months after permit issuance. Also, a special shield in section 5.0 of permit regarding compliance with the 1992 agreement versus regulations.		
1001A-93-P-1	Pronto	June 8, 1993	Stack extension for	None	None	NA

Permit Number	Permit Type	Issuance Date	Activity	Limits	Increase	Conclusion
			two coating stacks in order to conduct stack testing.			
1001A-93-P-2	Pronto	August 18, 1993	Install a biological water treatment system for treatment of groundwater.	None	Permit application lists 0.13 tpy of VOC.	NA
Amendment No. 1 to 1001A-93-OT-1	Administrative	June 7, 1994	Downdraft spray booth converted to a conventional spray booth – two stacks combined into one. BACT limit remains unchanged. Deletes. Pt 34 with combined stack now at Pt. 32 (Bldg 3B spray booth).	PM and PM10 = 0.18 lb/hr; VOC = 35.4 lb/hr, VOC Usage = 85.6 tpy for points 31, 32 and 33 (two previous limits combined); all BACT limits	None	Carried forward or replaced.
Amendment No. 2 to 1001A-93-OT-1 (13500002-004)	Major (public noticed)	August 30, 1994	Replacement of two generators with two larger ones. Hours limits needed to avoid NSR. Removes Pts. 61 and 62 and adds Pts 97 and 98 (GN-012 and 013).	Fixes old limits to remove references to Pts. 61 and 62. Limits new units to 600 hr/yr, each as a 12-month rolling sum	Decrease of PM, PM10 and VOC. Increases of: CO = 1.71 tpy, SO2 = 1.04 tpy, and NOx = 32.52 tpy (appears that we did mini-netting to get these numbers, not source-wide, but not clear since just did PSD in 1992)	Carried forward or replaced.
Also called Amendment No. 2 to	Administrative Amendment	not given, but letter dated April 25, 1996	Fixes the permit number in text on pages 1 and 2 of the	no changes	no changes	no changes

Permit Number	Permit Type	Issuance Date	Activity	Limits	Increase	Conclusion
1001A-93-OT-1			previous amendment			
Amendment No. 3 to 1001A-93-OT-1 (13500002-007 or 005)	Moderate (file copy missing, got one from Marvin)	June 19, 1996	Authorizes the installation of a 500 kW generator (Pt 99, EU 058, SV 072, Bldg 1).	adds rule limit for opacity	no TSD so; can't tell increase	carried forward or replaced
Amendment No. 4 to 1001A-93-OT-1 (13500002-008)	Moderate	August 12, 1997	Installation of a new emergency generator (Bldg 7). PTE is minor using EPA policy. However, PTE was calculated using 600 hr/yr. New EU 68 (SV077), 500 kW, diesel.	Only rule limits.	PM = 0.11 tpy PM10 = 0.10 tpy SO2 = 0.38 tpy NOx = 7.92 tpy VOC = 0.25 tpy CO = 0.67 tpy	Carried forward or replaced.
Amendment No. 5 to 1001A-93-OT-1 (13500002-009)	Major	April 29, 2002	K-D In-line system will be vented to the carbon adsorption system (now Dip Dry, Round Tops, and K-D will all be controlled). Dept. Dip still not controlled. Pt 11/16 (SV 007/008) is now listed as Dip Dry (EU 007), Round Tops (EU 008), and K-D (EU 012)	Previously listed Pts 12, 13, and 15 are to be used "for emergency exhaust" only. Updates limits in Section 3.2.2.1 and 3.2.2.2 as follows: Dip Dry and Round Tops = combined VOC emissions of 19.6 lb/hr, as mineral spirits (BACT) combined VOC Usage of 687 tpy same as before K-D (EU 012) and Dept	PSD increase calculated as 166 tpy; but qualified as a pollution control project (just re-routing existing unit to controls and keeping same VOC usage cap)	Carried forward or replaced.

Permit Number	Permit Type	Issuance Date	Activity	Limits	Increase	Conclusion
			vented to CE 029. Pt 16 is deleted.	Dip Stations (EU 054) limited to VOC Usage of 419 tpy, basis is to avoid PSD		
Amendment No. 6 to 1001A-93-OT-1 (13500002-010)	doesn't say; TSD indicates it is a major amendment (sign off sheet shows no public notice)	September 9, 2002	Change to the VOC calculation method established in amendment No. 5.	no change	NA	NA

Attachment 2
Wood Treatment Calculations

TECHNICAL SUPPORT DOCUMENT
For
AMENDMENT NO. 6
To
AIR EMISSION PERMIT NO. 1001A-93-OT-1

This technical support document is for all the interested parties of the permit. The purpose of this document is to set forth the legal and factual basis for the permit conditions, including references to the applicable statutory or regulatory provisions.

1. General Information

1.1. Applicant and Stationary Source Location:

Owner/Operator Address and Phone Number	Facility Address (SIC Code: 2431)
Marvin Windows and Doors P.O. Box 100 Warroad, MN 56763 Bradley Baumann 218-386-1430, ext. 1803	Highway 11 West Warroad, Roseau County, Minnesota

1.2. Description of The Facility

Marvin Windows and Doors operates an existing wood window and door manufacturing facility located in Warroad, Roseau County, Minnesota.

The wood treatment systems at Marvin apply a long lasting water repellant, fungal prevention and termite protection to the wood components of the windows and doors. The preservative and insecticide formulation contains a mineral spirits carrier. The mineral spirits carrier that dries from the parts creates the volatile organic compound (VOC) emissions from wood treatment operations at the facility. There are four existing systems at the facility:

1. Dip Dry Batch System (EU 007), Facility I.D. WT-001
2. Round Tops Batch System (EU 008), Facility I.D. WT-008
3. K-D In-line System (EU 012), Facility I.D. WT-005/WT-006
4. Departmental Dip Stations (EU 054)

The Dip Dry and Round Tops wood treatment systems are batch processes that completely immerse wood parts in a dip tank containing preservative. The loads are stacked with spacers, tipped and blown off with air knives to facilitate drainage of excess preservative after dipping. The treated parts are conveyed through a temperature controlled, steam heated drying oven where recirculating fans dry the parts as thoroughly as possible. The exhaust from these two wood treament system drying ovens is

controlled by a carbon adsorption system (CE 029). The carbon adsorption system consists of four large vessels containing activated carbon. The vessels are alternated on and off-line during adsorption and desorption cycles. The vessels are desorbed with steam, which is condensed and placed in a tank to separate mineral spirits from the water condensate. The mineral spirits is decanted off the water condensate and reused in the process. A maximum of approximately 60% of the mineral spirits used in the process is reclaimed and reused.

The K-D system (EU 012) is similar to the Dip Dry and Round Tops systems, but is an in-line continuous process that treats the parts by partial immersion and overhead sprayers, essentially flooding the part. The treated parts are conveyed through a temperature-controlled, steam-heated drying oven to dry the parts as thoroughly as possible. Currently these emissions are not controlled.

The Departmental Dip Stations (EU 054) are small containers located throughout the facility for treating small wood parts and end dipping cut parts.

1.3 Description of the Activities Allowed By This Permit Action

The previous permit amendment (amendment no. 5) allowed for the venting of emissions from the K-D system to the carbon adsorption system (CE 029) at the facility. After the venting of emissions from the K-D system to CE 029, the wood treatment processes will be as follows:

EU #	SV #	CE #	Description
007	007/008* 012**	029***	Dip Dry Wood Treatment System
008	007/008* 013/014**	029***	Round Tops Wood Treatment System
012	007/008* 015**	029***	K-D Wood Treatment System
054	Fugitive Emissions	----	Departmental Dip Stations

* Exhaust from the carbon adsorption system.
** Emergency exhaust only.
*** Carbon adsorption system.

Amendment No. 5 requires VOC usage recordkeeping for combined emissions from EU 008 and EU 008 and for combined emissions from EU 012 and EU 054. A Wood Treatment VOC Usage Calculation methodology attached to the permit is to be used to calculate daily combined VOC emissions from both EU 007/008 and EU 012/054. This amendment (amendment no. 6) changes the calculation methodology to more accurately reflect VOC usage at the facility.

In the previous calculation method, the mineral spirits going directly to the "MS Hose" at the facility were counted against the 687 ton/year limit for the Dip Dry / Round Tops system (EU 007/008). In reality, this usage should be counted against the 419 ton/year VOC limit for the KD System / Departmental Dip Stations (EU 012/054). In the calculation method for Amendment No. 5, the variable M was used to designate VOC usage for the MS Hose. In this amendment

(amendment no. 6), the variable N is used to designate the VOC usage for the MS Hose and this usage is counted as usage in the KD / Departmental Dip Stations (EU 012/054).

In addition to the above, this amendment also adds a new variable M which is used to designate the amount of VOC added directly to the Batch Dip tank. This usage is counted as usage in the Dip Dry / Round Tops System (EU 007/008).

No emission limits are changed with this permit amendment.

Table 2. Wood Treatment Processes Potential to Emit Summary:

EU #	SV #	Emission Unit Description	PM Tpy	PM10 tpy	SO2 tpy	NOx tpy	CO tpy	VOC Tpy	Pb tpy	Single HAP tpy	All HAPs tpy
007, 008	007/ 008	Dip Dry System (EU 007), Round Tops System (EU 008)						687			
012, 054	007/ 008	K-D Wood Treatment Sytem (EU 012), Dept. Dip Stations (EU 054)						419			

	PM Tpy	PM10 tpy	SO2 tpy	NOx tpy	CO tpy	VOC tpy	Pb tpy	Single HAP tpy	All HAPs tpy
Limited Potential Emissions from the Wood Treatment Processes	0.0	0.0	0.0	0.0	0.0	1106	0.0	0.0	0.0

Table 3. Facility Classification

Classification	Major/Affected Source	*Synthetic Minor	*Minor
PSD	X		
NAAR **Not Applicable**			
Part 70 Permit Program	X		

* Refers to potential emissions that are less than those specified as major by 40 CFR 52.21, 40 CFR pt. 51 Appendix S, and 40 CFR pt. 70.

2. Regulatory and/or Statutory Basis

Regulatory Overview of Units Affected by the Modification

EU, GRP, or SV #	Applicable Regulations	Comments
EU 007, EU 008	40 CFR 52.21	BACT limit of 19.6 lb/hr (stack emissions) established for EU 007 and EU 008. VOC usage limit of 687 tons/year also established to demonstrate that work practice standards (established as BACT) are being utilized. This permit amendment does not affect these limits. Only the VOC calculation method is being revised.
EU 012, EU 054	40 CFR 52.21	The permit establishes a VOC usage of limit for EU 012 and EU 054 of 419 tons/year to avoid classification as a "major modification" under 40 CFR 52.21. This permit amendment does not affect this limit. Only the VOC calculation method is being revised.

3. Technical Information

This amendment does not increase allowable emissions from the facility and does not authorize construction of any new emission units. The amendment does change the calculation method to be used to demonstrate compliance with VOC emission limits in the permit, so a major amendment is required. The revised VOC calculation methodology is attached to this document.

4. Conclusion

Based on the information provided by Marvin Windows and Doors, the MPCA has reasonable assurance that the proposed operation of the emission facility, as described in Amendment No. 6 to Air Emission Permit No. 1001A-93-OT-1 and this technical support document, will not cause or contribute to a violation of applicable federal regulations and Minnesota Rules.

Staff Members on Permit Team: Craig Thorstenson

Attachments: Wood Treatment VOC Usage Calculation Proposal. May 21, 2002.

Permit Action Number:
Date: 9/6/02

NOTE Correction: KD/Department Dip Dry VOC Usage Limit = 182 tons/year
Dip Dry/Round Tops VOC Usage Limit = 687 tons/year

Marvin Windows and Doors, Warroad, MN

Wood Treatment VOC Usage Calculation Proposal

May 21, 2002

The following diagram shows the possible paths that product may flow throughout the systems. Letters A through E and G through N represent gallons of liquid. Letter F represents vapor flow from KD Dip system to the solvent recovery system. The dashed boxes distinguish the two "VOC usage systems".

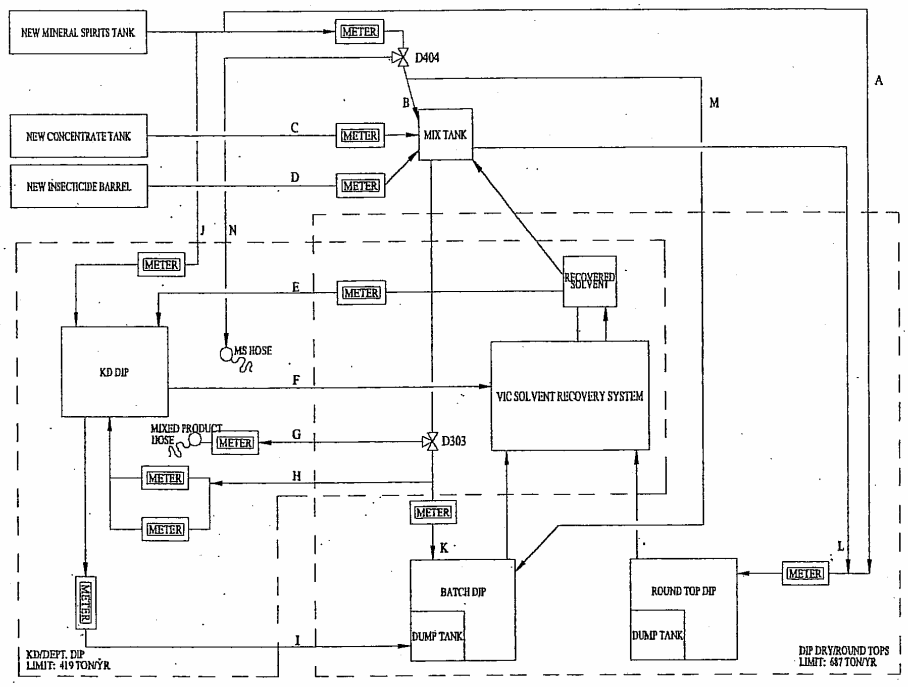

Our objective is to determine the VOC usage for each of the two systems (Dip Dry/Round Tops and KD/Departmental Dip). We can calculate these values by adding the product going into each system and subtracting the product going out. Data would be converted from gallons to VOC's (pounds/tons) based on the appropriate VOC contents.

If we consider the recovered solvent to be in both boxes, the usage for each system would be calculated by multiplying the ratio of gallons of mixed product used in each system to the total mixed product used in both systems by the total new product to the mix tank. Additional new product would also be added (J, A, M, and N) as indicated in the following VOC usage formulas:

KD/Department Dip (VOC Usage Limit = 419 tons/year):
USAGE = ((G+H-I)/(G+H+K+L) * (B+C+D)) + J + N

Dip Dry/Round Tops (VOC Usage Limit = 687 tons/year):
USAGE = ((K+L+I)/(G+H+K+L) * (B+C+D)) + A + M

This option calculates the usage of mixed product for a system based on a ratio of gallons used in that system to total gallons used in both systems. The recovered mineral spirits are not included in the usage calculations; rather the mineral spirits VOC's are only counted when new mineral spirits are added to the system.

Attachment 3
Potential to Emit Calculations for
Criteria and Hazardous Air Pollutants

(Paper Copy Only)

Attachment 4
Insignificant Activity Calculations

(Paper copy only)

Attachment 5
Facility Description and CD-01

(Paper copy only)