Substance Flow Analysis of Mercury in Products

Prepared for

Minnesota Pollution Control Agency

August 15, 2001

Barr Engineering Company
4700 77th Street
Minneapolis, MN 55435
Phone: 952-832-2600
Fax: 952-832-2601

Contents

I. Executive Summary 1

A. Introduction 1

B. Results 1

C. Recommendations 4

II. Introduction 5

A. About This Analysis 5

B. The SFA Approach 5

C. Background 6

III. Methods Used in This Analysis 9

A. Estimating the Amount of Mercury in Products in Minnesota 9

B. Evaluating Distribution and Emission Factors 11

1. The KEMI Approach 11

2. Distribution Factors 11

3. Emission Factors 12

C. Data Collection and Peer Review 13

IV. Results 16

A. Flow Diagrams 16

B. Product Descriptions and Basis for Flow Diagrams 16

1. Fluorescent Lamps 16

2. Other Mercury-Containing Lamps 20

3. Thermostats 22

4. Relays and Switches 27

5. Automobile Switches 29

6. Fever Thermometers 33

7. Measurement and Control Devices 36

8. Batteries 37

9. Pharmaceuticals and Fungicides 40

10. Latex Paint 44

11. Dental preparations 48

12. Bulk Liquid Mercury 54

13. Chlor-Alkali Plants 55

C. Distribution Factors 59
1. Municipal Solid Waste Distribution Factors 59
2. Infectious Waste Distribution Factors 60
3. Demolition Waste Distribution Factors 61
4. Sewage Sludge Distribution Factors 61
D. Emission Factors 62
1. Municipal Solid Waste Storage, Transport and Processing 62
2. MSW Disposal 64
3. Infectious Waste 67
4. Mercury Recycling 69
5. Transport and Processing of Sewage and Sewage Sludge 70
6. Disposal of Sewage Sludge 71
7. Breakage and Spills 71
8. Secondary Steel Production 72
9. Cremation and Burial 72
V. Conclusions 73
VI. References 74
Appendix A: Summary of Minnesota's Mercury-Related State Statutes 82

List of Tables

Table III-1: Approaches Used for to Estimate the Mercury Input for Each Product
Table III-2: Summary of Distribution Factors for Waste Disposal
Table III-3 Summary of Air Emission Factors for Waste Disposal
Table IV-1 Sensitivity Analysis of Emission Factors for Waste Disposal and Recycling Relative to Thermostat Recycling Rates
Table IV-2 Estimate of Mercury Emissions from Fungicide and Dissipative Use Volatilization—Minnesota Mercury Emissions Inventory
Table IV-3 Mercury Consumption/Use in the U.S. Chlor-alkali Industry

PREFACE

This is a technical report prepared by Barr Engineering Company for the Minnesota Pollution Control Agency (MPCA). It assumes that the reader has a basic understanding of mercury and its potential to cause environmental harm. It provides mercury flow diagrams for fourteen mercury-containing product groups along with information that documents the approaches taken by Barr and the data used to create the flow diagrams. Analyzing fourteen product lines in a short period of time precluded an exhaustive data search. This analysis is based on a review of reports and Internet websites, interviews, scientific journal searches, and professional judgment. Although the flow diagrams represent a significant step forward in better understanding which product-related sources of mercury appear to contribute the most to mercury releases, the numeric mercury releases projected by the flow diagrams should be considered rough estimates. We encourage readers with additional information or references to contact the MPCA (Edward Swain, MPCA, 520 Lafayette Road, St. Paul, Minnesota, 55155, USA, or edward.swain@pca.state.mn.us).

I. Executive Summary

A. Introduction

The intentional use of mercury in products has been decreasing over the last twenty years but remains an important contributor to mercury releases to the environment. This report describes the fate of mercury in fourteen product lines for 1990, 2000, and 2005. A quantitative framework was developed for each product line to show the flow of mercury during product use and disposal, including points at which mercury may be released to the environment.

This project was commissioned by the Minnesota Pollution Control Agency (MPCA) to support the Minnesota Mercury Emissions Inventory. The mercury flow diagrams presented in this report are simple models that necessarily required many assumptions about the transfer of mercury along various pathways. The pathways of mercury are complex for some products, and there is a severe shortage of information about most of these pathways. In addition, limited time did not allow for an exhaustive data search. However, this analysis is an important interim step in better understanding the fate of mercury in products. The flow diagrams presented here are intended as working models that will be refined as we learn more about the processes and as the intentional use of mercury changes.

The results of this analysis can help to quantify the impacts of past efforts to decrease mercury use and emissions, as well as to estimate the likely impacts of future efforts to continue to decrease mercury use and releases.

B. Results

The quantitative frameworks ("flow diagrams") were created as spreadsheets using Microsoft Excel, allowing them to be used to calculate the environmental impacts of making changes related to each product, such as increasing the recycling rate. While each diagram can be used individually, the product-specific spreadsheets are also linked to one spreadsheet that includes "generic" data as well as to summary tables as described below. This allows a user to quickly determine the impacts of global changes that would affect many products, such as increasing the percentage of waste that is combusted versus the percentage that is landfilled.

Three general types of data were used to create the frameworks: 1) the estimated input of mercury to each product type, 2) “distribution factors” that predict how much mercury will follow a given pathway (for example, the percentage that is disposed of as municipal solid waste [MSW]), and 3) “emission factors” that predict how much mercury will be released to air or water at various points during the manufacture, use and disposal of a product. Distribution factors that apply to all products, such as the distribution of municipal solid waste between landfilling, combustion and composting, are located in one spreadsheet named General Data.xls. Generic emission factors that are applicable to most products, such as the percent of mercury released from landfills, are also included in the General Data spreadsheet. The General Data spreadsheet and the product spreadsheets are linked so that if a distribution or emission factor is changed in the General Data spreadsheet, each product spreadsheet is automatically updated. The summary tables discussed in the Executive Summary are also linked to the product spreadsheets to update automatically.

Estimated releases of mercury from each product line to air, water and land are summarized in Table ES-1. Most of the products have estimates for the three inventory years; however, mercury releases for pharmaceuticals were only estimated for 2000 because this does not appear to be a significant source of mercury release to the environment.

The two largest sources of mercury releases in 1990 were latex paint and batteries, but the intentional use of mercury in these product lines was discontinued shortly thereafter. In 1990, latex paint and batteries contributed 60 percent of the mercury releases to the atmosphere for all product lines. In 2000, they contributed less than 0.5 percent. The total mercury release to the atmosphere from these product lines dropped from more than 5100 kilograms in 1990 to about 640 kilograms in 2000—an 88 percent decline in 10 years.

As Table ES-1 shows, dental use of mercury was estimated to be the fifth largest source of mercury to air from intentional use in 1990. However, reductions from more significant sources such as paint mean that dental amalgams are predicted by this study to be one of the largest sources of mercury from intentional use to both air and water in 2000 and 2005. One reason for this is that placement, removal and daily wearing- down of mercury amalgams contributes more mercury than other products to wastewater from both dental offices and human waste. Most of the mercury in wastewater is collected in sludge, and over half of the sludge in Minnesota is combusted, resulting in releases to air due to the limited mercury-control efficiency achieved at

sludge incinerators. Barr has also assumed that a relatively significant percent (ten percent) of mercury is lost to air in transit to wastewater treatment plants as mercury volatilizes in pipes.

The quality of data is very important to a quantitative analysis and, as indicated above, the data on mercury in products is severely lacking. We developed a method for assessing the quality of the data and the reliability of the calculations to estimate mercury flux (mass per time). Table ES-2 is a summary of the quality assessments. Each mercury release was assigned a confidence level (low, medium, or high) based on the quality assessments. A worksheet describing details of the quality ranking system follows Table ES-2. This quality ranking system was also used to rank values in the calculations worksheet accompanying each flow diagram. The only estimates with high confidence are the 2000 and 2005 releases from latex paint (0 kilograms), because mercury was banned in latex paint in 1991. Even in this case there is uncertainty regarding volatilization rates that affects these estimates. Overall, the table shows that the confidence levels in these final numbers are low to medium.

Table ES-3 shows releases to air from each product line summed by each release pathway (e.g., MSW landfilling, mercury product recycling, etc.). This provides an indication of which pathways release the most mercury. For example, in 1990, our study predicts that most mercury was emitted from consumer product use and breakage (mainly due to use of mercury-containing paint and fungicides). In 2000, sewage sludge incineration is estimated to have been the largest release pathway, while in 2005 losses associated with mercury product recycling are predicted to be the largest route, closely followed by releases from consumers, sludge land application and sludge incineration. As noted above, the data used to create these estimates is limited; therefore, the results shown in summary tables such as ES-3 should be used for general comparisons only.

Estimates of mercury releases from pathways which are the same or similar to those included in the mercury emissions inventory by MPCA staff, published in *Fuel Processing Technology* 65-66 (2000), are also shown in Table ES-3 to allow comparison to previous estimates. Although the total estimated air emissions from purposeful mercury use generated by this study are within 100% of that estimated by MPCA staff for 1990 and within 35% for 2000 and 2005, the estimates for most pathways often differ by more than 100%. It should be noted that some pathways, in particular infectious waste and demolition debris, were included for a few products that were considered most likely to end up in these waste streams but not for all product lines. As a result, the total estimated releases from infectious waste incinerators as estimated by Barr and shown in

Table ES-3 grossly underestimate emissions from this source group. Similarly, estimated releases from demolition debris disposal are likely too low, while estimates for MSW disposal routes may be too high because mercury products that may actually be in non-MSW waste have been included in that pathway.

Barr's estimates for emissions from MSW combustion are very close to MPCA's estimates for 2000 and 2005. This may be interpreted to indicate that the fourteen products considered by this study account for the majority of mercury found in MSW. Barr's estimated emissions from MSW combustion are much higher than MPCA's estimates for 1990. Because MPCA's estimates are based on stack test data and reasonably accurate waste throughput data, we expect that MPCA's estimates of total mercury emissions from waste combustors in 1990 are more accurate than Barr's. It appears that we have either overestimated the emission factors for 1990 and/or overestimated the input from products (e.g., batteries).

C. Recommendations

As with any quantitative model, these mercury flow diagrams should help to define and prioritize data needs. The spreadsheet models prepared for this study should be refined as more information is collected. We recommend that users of these models conduct their own sensitivity analysis to assess which information about a product is most needed.

To get an idea of the time required to create a more accurate flow diagram and the resulting complexity, Barr created a flow diagram for mercury in dental preparations that is more detailed and includes more thorough research than that used for the other products. Comparing this diagram with those for other products shows that the resulting diagram, although it should be more accurate, is also much more complex, which may make use of it by others more difficult. The additional time required to similarly increase the level of detail for other products is estimated to be at least 20 hours per product, which includes time spent reviewing research but not conducting research.

The frameworks created by this study for Minnesota could be used by other states and provinces as well. The format of the frameworks should be directly transferable. The estimated quantity of mercury input to each product, as well as most or all distribution factors and some emission factors, would need to be changed to tailor the results to fit another location.

Table ES-1
Mercury in Products
Summary Table of Mercury Releases to Air, Land, and Water

Units in kg Hg/y

	Air			Water			Land			TOTAL		
Product	**1990**	**2000**	**2005**	**1990**	**2000**	**2005**	**1990**	**2000**	**2005**	**1990**	**2000**	**2005**
Dental	442	276	188	42	22	14	306	393	335	791	691	537
Fluorescent lamps	242	70	43	2	1	0	333	202	73	577	272	116
HID & other lamps	21	10	6	0	0	0	28	26	14	50	36	21
Pharmaceuticals[1]		0.3			0.1			0.0			0.4	
Fungicides[2]	676	0	0	133	0	0	511	0	0	1320	0	0
Latex Paint[3]	1338	0	0	66	0	0	38	0	0	1442	0	0
Bulk liquid mercury[4]	12	12	12	1	1	1	16	16	16	29	29	29
Relays and Switches	468	119	109	4	4	4	783	288	193	1254	411	306
Measurement & control devices	212	147	94	4	3	2	750	900	514	966	1050	610
Batteries	1708	3	3	90	0	0	4876	29	26	6674	33	29
Chlor-alkali products[5]	0	0	0	4	2	2	0	0	0	4	2	2
TOTALS	**5120**	**637**	**454**	**346**	**33**	**22**	**7642**	**1854**	**1172**	**13107**	**2524**	**1648**
Products that are included above:												
Automobile Switches[6]	18	5	5	0	0	0	42	12	12	60	17	18
Thermostats[6]	35	21	14	0	0	0	130	113	55	165	134	69
Fever thermometers[7]	136	81	70	4	3	2	187	243	193	326	327	264

Footnotes

1 Mercury releases from pharmaceuticals have not been estimated for 1990 and 2005. Most Hg uses in pharmaceuticals were discontinued by 1990.
2 Mercury releases from fungicides have not been estimated via flow diagrams for 2000 and 2005 because, like paint, they are expected to be less than 0 kg
3 Releases of Hg from latex paint are estimated to be zero by 2000. There is no reason to expect > 0 in 2005.
4 Bulk liquid mercury flow diagrams were not created for 1990 and 2005 due to lack of information and resources.
5 Releases of Hg from chlor alkali products include only releases in MN from caustic soda; releases from chlor-alkali plants are not included. No indication that Hg is released from chlorine.
6 Automobile switches and thermostats are subsets of "relays and switches."
7 Fever thermometers are included in "measurement and control devices."

Table ES-2
Mercury in Products
Summary Table of Data Quality and Confidence Level in Releases

QA Method: QA Code for data quality/calculation rating and confidence level (low, medium, & high) for final release estimates

Key: H = High confidence
M = medicum confidence
L = Low confidence

		Air			Water			Land		
Product		**1990**	**2000**	**2005**	**1990**	**2000**	**2005**	**1990**	**2000**	**2005**
Dental		M	M	L[1]	M	M	L	M	M	L
Fluorescent lamps		M	M	M	L[2]	L	L	M	M	M
HID & other lamps		M	M	L	L	L	L	M	M	L
Thermostats		M	M	L	L	L	L	M	M	L
Fever thermometers		M	M	L	L	L	L	M	M	L
Relays and Switches		L[3]	L	L	L	L	L	L	L	L
Measurement & control devices		L	L	L	L	L	L	L	L	L
Batteries		M	M	M	L	L	L	M	M	M
Automobile Switches		M	M	L	M	M	L	M	M	L
Pharmaceuticals		M	M	M	M	M	M	M	M	M
Fungicides		M	M	M	M	M	M	M	M	M
Latex Paint		M	H	H	M	M	M	M	H	H
Bulk liquid mercury		L	L	L	L	L	L	L	L	L
Chlor-alkali plant & products		M	M	L	M	M	L	M	M	L

Footnotes

1 Many estimates for 2005 have low confidence because they are based on predictions rather than existing data
2 Most estimates of releases to water have low confidence because little is known about releases to water from spills
3 Estimates for relays and switches as well as measurement and control devides are all low confidence because they are based on very limited national data regarding many different products

Quality Assessment Method for Mercury in Products Flow Analysis

Data and calculation methods were assessed separately and then combined to give a QA score, which can be grouped in three levels of confidence in the final estimate.

QA Code		CALCULATION RATING			
		1	2	3	4
DATA GRADE	A	A1	A2	A3	A4
	B	B1	B2	B3	B4
	C	C1	C2	C3	C4
	D	D1	D2	D3	D4
	E	E1	E2	E3	E4

Confidence Level

High
Medium
Low

Data Quality Grade	Description
A	High; thorough documentation of sources, methods, and accuracy
B	Good; appears well supported but some aspect not clear
C	Moderate; appears to be valid but quality not well known
D	Low: very questionable accuracy
E	Unsuppported; unknown quality

Calculation Method Rating	Description
1	Scientifically sound approach, requiring minor judgments for assumptions
2	Technically sound, but based on critical assumptions that could alter outcome
3	Simple calculation or relationship, based on questionable assumptions
4	Based on judgment only

Demolition Debris							Infectious Waste								
Demolition Landfill			Transit				Incineration			Autoclave			Transit		
Table ES-3 Mercury in Products	1990 2000	2005	1990	2000	2005		1990	2000	2005	1990	2000	2005	1990	2000	2005
Summary Table of Mercury Releases to Air, Land, and Water							7	0	0	3	1	1	0	2	2
Units in kg Hg/y															
		Municipal Solid Waste (MSW)													
			Landfill		RDF Processing &Combustion			Mass Burn Combustion			Burn Barrels			Compost			Transit		
Product		1990	2000	2005	1990	2000	2005	1990	2000	2005	1990	2000	2005	1990	2000	2005	1990	2000	2005
Dental		1	1	0	6	0	0	21	3	1	2	1	0	2	0	0	4	3	1
Fluorescent lamps		0	0	0	21	1	4	94	9	3	15	3	1	8	2	1	65	29	11
HID & other lamps		0	0	0	2	1	0	8	1	1	1	0	0	1	0	0	5	4	2
Pharmaceuticals		<1	<1	<1	<1	<1	<1	<1	<1	<1	<1	<1	<1	<1	<1	<1	<1	<1	<1
Fungicides																			
Latex Paint		0	0	0	2	0	0	6	0	0	2	0	0	0	0	0	8	0	0
Bulk liquid mercury		1	1	1	0	0	0	1	1	1	0	0	0	0	0	0	2	2	2
Relays and Switches		10	3	2	58	1	0	220	12	7	22	3	1	16	2	1	11	3	2
Measurement & control devices		9	10	6	44	2	1	34	40	22	8	10	3	6	7	4	8	10	5
Batteries		65	0	0	330	0	0	959	1	1	262	1	1	23	0	0	67	0	0
Chlor-alkali plant & products		<1	<1	<1	<1	<1	<1	<1	<1	<1	<1	<1	<1	<1	<1	<1	<1	<1	<1
TOTALS		**86**	**15**	**9**	**462**	**5**	**6**	**1344**	**66**	**36**	**312**	**18**	**5**	**56**	**12**	**6**	**171**	**50**	**23**
Products that are included above:																			
Automobile Switches	2 2						7			0			1			0			2
Thermostats		0	0	0	2	0	0	9	1	1	1	0	0	1	0	0	3	2	1
Fever thermometers		2	2	2	10	0	0	30	7	6	8	6	3	1	0	1	24	22	17
					All MSW Combustion (RDF + Mass Burn)														
Combined totals					1990	2000	2005												
for MSW Combustion and Hg Recycling					1406	71	42												
2	2	1	4	3		2													
Data from MPCA Inventory[2]																			
in Pounds (lb) Hg/year		13	13	13	1406	156	87	6	0	0	666	2 180	126 0	2	0	1	3	1304	3	288	192
In Kilograms (kg) Hg/year		6	6	6	820	71	39				302	82	57	1	0	0	592	131	87
Barr estimate - MPCA estimate		80	9	3	986	0	2				10	-64	-52	55	11	6	-421	-81	-64
Percent difference		1362%	149%	50%	120%	0%	6%				3%	-78%	-91%	6028%	2505%	1306%	-71%	-62%	-74%

Footnotes

1 Jackson, A.M., et al. Fuel Processing Technology 65-66 (2000).

2 MPCA estimate includes all releases from smelters for cars and appliances; Barr estimate only includes cars.

Not estimated by MPCA			Not estimated by MPCA			516	36	36	Not estimated by MPCA			Not estimated by MPCA			
						234	16	16							
						-227	-16	-16							
						-97%	-100%	-99%							

Sewage Sludge												Recycling					
Incineration			Land Application			Landfill			Transit (from sewer pipes)			Losses from Recycling			Transit		
1990	2000	2005	1990	2000	2005	1990	2000	2005	1990	2000	2005	1990	2000	2005	1990	2000	2005
261	104	39	36	53	39	1	1	1	42	32	24	7	2	3	3	3	4
10	3	1	0	0	0	0	0	0	2	1	0	0	8	12	0	5	4
1	0	0	0	0	0	0	0	0	0	0	0	0	0	0	0	1	1
2	0	0	0	0	0	0	0	0									
20	0	0	3	0	0	0	0	0									
0	0	0	0	0	0	0	0	0				5	5	5			
26	19	8	9	10	12	0	0	0	1	0	0	32	3	4	34	14	20
17	12	4	8	6	6	0	0	0	1	1	1	11	14	14	43	29	20
												1	0	0			
338	**138**	**52**	**57**	**68**	**58**	**1**	**1**	**1**	**46**	**34**	**26**	**55**	**32**	**39**	**80**	**53**	**50**
												0	0	0			
2	1	0	0	0	0	0	0	0	0	0	0	2	3	3	0	1	2
23	6	5	3	6	7	0	0	0	4	4	3	0	4	6	0	1	2

Losses to Air from Recycling (including transit)

1990	2000	2005
135	85	88

247	160	65	4	2	2	Not estimated by MPCA			Not estimated by MPCA			4	50	65			
112	73	30	2	1	1							2	23	30			
226	65	23	55	68	57							133	62	59			
201%	90%	78%	3023%	7439%	6283%							7347%	275%	199%			

Breakage and other releases from consumer			Breakage and other releases from retail			Dental office			Hazardous Waste Disposal			Cremation			Automobile shredders and electric arc furnaces [2]			Totals		
1990	**2000**	**2005**	**1990**	**2000**	**2005**	**1990**	**2000**	**2005**	**1990**	**2000**	**2005**	**1990**	**2000**	**2005**	**1990**	**2000**	**2005**	**1990**	**2000**	**2005**
5	6	6				21	21	20	7	14	10	14	31	38				441	273	188
26	9	6	1	0	0													242	70	43
2	2	2	0	0	0													21	11	6
																		<1	<1	<1
673	0	0																676	0	0
1295	0	0						2	0	0								1337		
4	4	4																12	12	12
28	49	49	1	1	1													469	119	109
20	7	5	2	1	1													212	147	94
0	0	0																1707	3	3
																		<1	<1	<1
2054	**76**	**71**	**5**	**3**	**2**	**21**	**21**	**22**	**7**	**14**	**10**	**14**	**31**	**38**	**18**	**5**	**5**	**5117**	**635**	**454**
0	0	0													18	5	5	18	5	5
8	6	3	0	0	0													35	19	14
16	16	14	3	3	0													136	81	70

1015	81	58	Not estimated by MPCA			24	6	3	5	5	5	24	45	45	166	83	42	5852	1108	742
461	37	26				11	3	1	2	2	2	11	20	20	75	38	19	2657	503	337
															See Footnote 2					
1593	39	45				10	19	21	5	12	7	4	10	18	-58	-33	-14	2460	132	118
346%	105%	171%				95%	686%	1517%	216%	509%	322%	33%	50%	86%	-77%	-87%	-74%	93%	26%	35%

Sources included above in MPCA estimate of releases from consumers (in lb/yr):

Paint volatilization	500	2	0
Lamp breakage	330	20	10
General laboratory use	44	22	22
Fungicide volatilization	86	5	5
Volatilization from spills and land dumping	55	32	21

II. Introduction

A. About This Analysis

Mercury is in many products, either as a contaminant (incidental use) or as an added substance because of mercury's desirable physical properties (intentional use). In this report, the fate of mercury is analyzed for fourteen product lines:

1. Fluorescent lamps
2. Other mercury-containing lamps
3. Thermostats
4. Automobile switches
5. Relays and switches (including thermostats and automobile switches)
6. Fever thermometers
7. Measurement and control devices (including fever thermometers)
8. Batteries
9. Pharmaceuticals
10. Fungicides
11. Latex paint (separate from fungicides)
12. Dental preparations
13. Bulk liquid mercury stored in homes, farms, schools, universities, laboratories, and businesses (tentative)
14. Mercury cell chlor-alkali plant products

The first 12 product lines represent intentional use of mercury. The last product line—mercury cell chlor-alkali plants—is a production *process* intentionally using mercury, which creates an incidental presence of the mercury in the product (sodium hydroxide or caustic soda). Although mercury cell chlor-alkali plants have been the largest consumer of mercury in the United States, the amount of mercury in the caustic soda they produce is relatively small.

B. The SFA Approach

This report describes Barr's analysis, which will enhance Minnesota's Mercury Emissions Inventory by quantifying (1) mercury in products, (2) the distribution of mercury as products are used and disposed of, and (3) the fate of mercury in air, water, and land. We have used an

approach known as Substance Flow Analysis (SFA), described as "a tool for analyzing the societal metabolism of substances"[1]—in other words, for evaluating how products are used and disposed of. An SFA has three parts: (1) goal and system definition, (2) inventory and modeling, and (3) interpretation. The *goal* of this study was to determine how much mercury is going to air, water, and land from the incidental use of mercury in products. The *system* is defined by the flow of mercury in each product line and is represented by a flow diagram. To develop the system, we inventoried available information (research reports, intranet sites, industry associations, experts, etc.) and then applied the information to a spreadsheet model that is overlain on the flow diagram. Such models—rather than static diagrams—allow the inputs, distribution factors, and emission factors to be changed to evaluate multiple scenarios. The three scenarios presented in this report are for 1990, 2000, and 2005. Future uses of the models could include evaluating the mercury reduction benefit of specific changes in a product's use or distribution.

The last step in the mercury flow analysis is interpretation of the scenarios. In this report, we have addressed the relative contribution of each product to mercury releases in Minnesota and the transferability of this analysis to other governmental units. We also discuss the quality of the data in each product group, in particular noting the gaps that were beyond the scope of this project and should be filled through additional analysis. Analyzing fourteen product lines in a short period of time precluded an exhaustive search. This analysis is based on a review of reports and websites, interviews, scientific journal searches, and professional judgment. We encourage readers with additional information or references to contact the MPCA or Barr Engineering Company.

C. Background

a) Mercury Research and Reduction Efforts in Minnesota

Since the mid-1980s, the Minnesota Pollution Control Agency (MPCA) has been researching the extent of mercury contamination and developing programs to reduce mercury emissions. The agency initially focused on documenting the concentrations of mercury in fish and lake water. It has been a leader in the use of lake sediment cores to discern the historical emissions of mercury over the last two hundred years, based on the accumulation rates of mercury in the sediments. MPCA programs to reduce mercury in the environment include education (e.g., for the medical

---

[1] Udo de Haes, H., R. Heijungs, G. Huppes, E. van der Voet, and J. Hettelingh. 2000. Full Mode and Attribution Mode in Environmental Analysis. J. Industrial Ecology 4(1): 45-56.

industry), regulation, and enforcement (e.g., emission controls on municipal solid waste [MSW] combustors, and mercury Total Maximum Daily Loads [TMDLs]).

In 1996, the MPCA and Minnesota Office of Environmental Assistance (MOEA) produced the Mercury Products Report, which was sponsored by a grant from the U.S. EPA and provided an exhaustive inventory (updated in 1999) of mercury-containing products, including a list of pesticides and other chemicals that contain mercury. This evaluation lead to a number of product stewardship statutes in Minnesota that require recycling, labeling, and bans on various products (see Appendix A for a brief description of the statutes).

Minnesota's Mercury Contamination Reduction Initiative is an MPCA project aimed at reducing mercury contamination in fish. Beginning in 1997, an Initiative Advisory Council, made up of representatives from industry, environmental groups and government, was formed to provide recommendations on mercury reduction strategies. In 1999, the Advisory Council provided recommendations to the MPCA that included establishing a statewide goal to reduce mercury releases to air and water (combined) by 60% in the year 2000 and by 70% in 2005, using 1990 as the baseline year (it was also the baseline year established by the Binational Toxics Strategy). This goal was adopted by the state legislature as Minn. Stat. 116.915 (see Appendix A). The Advisory Council recommended other actions to reduce mercury contamination, including reducing the intentional use of mercury and creating voluntary agreements with mercury sources. Establishing a credit-for-early-action (early reduction credits) program was also discussed and recommended for pursuit at a national or international level. This study supports the Minnesota Mercury Reduction Initiative by evaluating the fourteen product groups for years 1990 and 2000, as well as estimating product and mercury flows for 2005.

The results from this mercury flow analysis can prove useful for the MPCA and others in reducing mercury contamination in ways related to the Advisory Council recommendations. In particular, the flow diagrams provide a framework for estimating whether significant reductions are achievable from particular activities, such as collecting certain mercury-containing products, which can prove useful in prioritizing agency efforts. In addition, the mercury flow analysis—with the statewide mercury emission inventory—may be used to estimate the appropriate credit for early mercury reductions by local governments and industry and to evaluate the benefits of mercury-reduction programs.

b) Development of a Mercury Release Inventory for Minnesota

The MPCA's Minnesota Mercury Emissions Inventory[2] includes air emission estimates for all significant sources of mercury, incidental and intentional, for 1990, 1995, 2000 and 2005. Although direct releases to air from a few specific products are included, such as fluorescent lamp breakage and latex paint, many are not. Rather, the MPCA mercury emissions inventory looks at the total mercury emissions from mercury sources rather than specific mercury-containing products.[3] The MPCA is revising the inventory and a revised version will be available in 2001. This study supports the inventory revisions and should improve its accuracy by providing more detailed information about mercury-added products' use and disposal.

---

[2] MPCA 1999. Report on the Mercury Contamination Reduction Initiative Advisory Council's Results and Recommendations, pages 23-24. (Available on MPCA's mercury web page at http://www.pca.state.mn.us/air/mercury-mn.html)

[3] Jackson et al. Minnesota's Mercury Contamination Reduction Initiative. Fuel Processing Technology 65-66 (2000) p. 79-99.

III. Methods Used in This Analysis

A. Estimating the Amount of Mercury in Products in Minnesota

We used a number of approaches to estimate the quantity of mercury contained in each product type. This information was then used to estimate the input to retailers and consumers. For some products it was also necessary to estimate the amount of mercury contained in products which may have been purchased or installed many years ago but are still in use or "storage" and, therefore, potential sources of mercury release in the years in question. For example, dental amalgams, products such as thermostats that contain mercury switches and relays, and thermometers would typically be in use for five or more years.

In most cases, to estimate mercury input we multiplied the amount of product purchased by the quantity of mercury in an average product. In other cases, the available data only indicated the total amount of mercury used in production of a given product group. In the case of bulk liquid mercury, an extremely rough estimate of the quantity of bulk mercury in storage and discarded per year statewide was made based on the quantity of bulk mercury collected by Western Lake Superior Sanitary District's household hazardous-waste collection program. The approach taken for each product is summarized in the table that follows. More details may be found in the supporting documentation provided with each flow diagram as well as in the product-specific discussions in Part IV.

In some cases, the input of mercury to Minnesota has been estimated using national data, such as product sales or use, assuming that use in Minnesota is proportionate to the national rate based on population. For example, it is assumed that Minnesota buys approximately 2% of the fluorescent lights purchased per year nationally, because the population of Minnesota is 1.8% of the national population. Minnesota's economic activity equates to approximately 2% of the national total. The degree to which this assumption is valid depends on a number of factors, including the degree to which a state's demographics mirror the national average. For most cases, we have assumed that the key factor affecting purchasing habits is average household income. According

to the Bureau of Economic Analysis (BEA) statistics, Minnesota's per capita disposable income in 2000 was approximately seven percent above the national average.[4]

Table III-1: Approaches Used for to Estimate the Mercury Input for Each Product

Product	**Quantity Calculation**	**Concentration**
APPROACH #1: based on quantity x concentration		
Auto switches	# of automobiles registered in MN * switches/auto	1 g/switch
Chlor-alkali	National production rate of caustic soda * 2%	0.02 to 0.2 ppm Hg
Dental	# of amalgams placed/dentist * # of dentists in MN that work with Hg	.27 g/capsule
Fever thermometers	# of fever thermometers sold in US * 2%	0.7 g/fever thermometer
Fluorescent light bulbs and other mercury-containing bulbs	# of lamps sold in US * 2%	Varies by year
Fungicides	# of 9-hole and 18-hole golf courses in MN * square meters/golf course	40 g Hg/100 sq. m. at 10% of courses (using inorganic Hg) 4 g Hg/100 sq. m. at 30% of courses (using organic Hg)
Thermostats	Estimated # of thermostats installed based on # of new housing units constructed, adjusted to include commercial facilities	3.2 g Hg/thermostat
APPROACH #2: based on total input of Hg to products		
Batteries		
Measurement and control devices		
Switches and Relays		
Paint		
Pharmaceuticals		
APPROACH #3: based on quantity received by a household hazardous waste collection program		
Bulk Mercury		

[4] Other states should consider potentially significant differences in demographics. Information on all states' income levels is available at the BEA website: (http:www.bea.doc.gove/bea/regional/spi/)

B. Evaluating Distribution and Emission Factors

1. The KEMI Approach

In evaluating mercury emissions in the United States, the Mercury Study Report to Congress[5] considered only emissions from products when incinerated.[6] In Europe, mercury in products has been evaluated by the Swedish National Chemicals Inspectorate (KEMI). The KEMI study[7] was the basis for using distribution and emission factors in this study. It looked at mercury from batteries, fluorescent lamps, and sewage sludge, with distribution of the mercury (distribution factors) limited to incineration, landfilling, and breakage. The KEMI report estimated 18% (72 tons) of mercury emissions in Europe are attributable to mercury in products.[8]

2. Distribution Factors

Distribution factors are used to indicate the likelihood that a product and mercury contained in the product will follow a given pathway. Generally speaking, distribution factors are based on “flow splits,” the separation of a flow into two or more flows. For example, consumer waste is typically split into recycled and non-recycled waste, then non-recycled is split into additional categories of various waste disposal methods. Distribution factors as used in this study are numbers less than one, with all distribution factors for a given split adding up to one. Alternatively, percentages can be used. For this analysis, in addition to incineration, landfilling, and product breakage as considered by KEMI, we included a number of additional potential pathways, including disposal via wastewater. "Generic" distribution factors were developed that predict the fraction of waste (and therefore, mercury in waste) that would be directed to potential disposal routes for municipal solid waste (MSW), infectious waste, demolition waste, and wastewater sludge. A summary of these “generic” waste distribution factors is presented in Table III-2. MSW and wastewater were included as possible routes for all products, using the generic distribution factors contained in the Microsoft Excel file called General Data.xls. Infectious waste management and demolition debris disposal were added to the flow diagrams for products that were considered likely to have a significant potential for disposal via those routes. In a few cases, product-specific distribution

---

[5] U.S. EPA Volume II. 1997

[6] BNS 1999: Section 3. Waste Disposal and Recycling.

[7] KEMI 1997

[8] Of these emissions, 66% (47 tons) is from incineration, 20% (14.5 tons) is from recycling steel scrap, 13% (9.2 tons) is from landfills, and 1% (0.8 tons) is from product breakage during use.

factors were also added to the diagrams to account for fates other than disposal as waste. For example, cremation and burial are included as possible fates for dental amalgams.

The portion of the flow diagram leading up to the "fate" distribution factors described above is specific to each product. For example, recycling was added as an alternative for some products for which recycling is known to occur.

Distribution factors were calculated in two ways. In some cases an estimate of the fraction of mercury associated with a given fate was available. For example, the Association of Lighting and Mercury Recyclers has estimated the percentage of fluorescent lamps that are recycled. This translates directly into a distribution factor. In other cases, the quantity of mercury that is directed to a given fate is known. For example, the Thermostat Recycling Corporation tracks the total quantity of mercury collected in recycled thermostats. In such cases a distribution factor was calculated by dividing the quantity destined to that pathway by the estimated input.

3. Emission Factors

Emission factors indicate the amount of mercury entering a given pathway that is released to the environment. For example, if 10 kilograms (kg) of mercury enter a waste combustor and 3 kg are released to the air, then the air emission factor for that pathway would be 0.3 (30%). Emission factors for releases to air have been developed for 22 potential mercury pathways, including emissions associated with product use as well as disposal. Some emission factors are specific to a product category, such as the emission factors for recycling fluorescent lamps, while others, especially emission factors for waste disposal, are used for most or all products. A summary of "generic" emission factors for waste disposal is provided in Table III-3. The basis for and critical assumptions used in calculating emission factors are presented in Part IV.

The quality of the emission factors varies greatly. Most estimates of mercury releases from products en route to consumers (from retailers) and during use by consumers are very rough "placeholder" estimates created by Barr. Very little information is available on how much mercury is released from products due to breakage and spills prior to disposal, particularly for products other than those from which mercury can be expected to readily volatilize (e.g., paint and fungicides). Emission factors for some waste disposal methods, particularly combustion of MSW, infectious waste and sewage sludge, are relatively accurate due to the availability of stack testing data from such combustors. The accuracy of emission factors for non-combustion

disposal methods such as landfilling and composting—as well as for waste processing, transit and storage—is poor, as less data is available.

Most mercury-added products in waste streams that become part of solid waste or wastewater-treatment-plant sludge are considered to have an equivalent chance of releasing their mercury, so the analysis of emission factors is specific to the waste treatment process rather than to the product line. In the mercury flow models, therefore, emission factors were usually the same for all the products, with exceptions noted in the technical report sections and flow diagrams.

C. Data Collection and Peer Review

Data regarding the mercury content of products, the amount of each product type used in Minnesota, the fate of various wastes, and emissions has been gathered from a wide variety of sources, including published and unpublished literature, the Internet (e.g., data on the number of homes constructed by year and by state), and personal communications by telephone or e-mail. The primary sources of data used are listed in the Results section.

Due to time and budget constraints, the results of this study have not undergone peer review. We expect that there are a number of industry associations and others with more recent or more accurate data that, if incorporated into the flow diagrams, would alter the results. Recommendations for incorporating data that would improve this analysis or concerns regarding the methods used should be brought to the attention of Barr or MPCA staff.

Table III-2: Summary of Distribution Factors for Waste Disposal

Pathway		Distribution Factors		
Waste Category	Disposal Method	**1990**	**2000**	**2005**
MSW	Landfilling	54%	55%	56%
	RDF processing and combustion	21%	21%	22%
	Mass burn combustion	16%	17%	17%
	Composting	1%	1%	1%
	Burn Barrels	8%	6%	4%
MSW from primarily non-residential sources	Landfilling	50%	57%	58%
	RDF processing and combustion	22%	22%	23%
	Mass burn combustion	22%	18%	17%
	Composting	2%	1%	1%
	Burn Barrels	4%	2%	1%
Infectious Waste	Incineration	50%	15%	20%
	Autoclaving	50%	85%	80%
Demolition Debris	Landfilling	100%	100%	100%
Hazardous Waste	-	100%	100%	100%
Sewage Sludge	Incineration	76%	58%	50%
	Land application	19%	35%	44%
	Landfilling	5%	6%	7%
Distribution from WWTP to sludge	-	90%	93%	94%

Note: Distribution factors, shown here as percentages, may also be written as numbers less than one, as shown in most flow diagrams. For example, distribution factors of 76% and 0.76 are equivalent. The input of mercury multiplied by the distribution factor for a given pathway calculates output to that pathway.

Table III-3: Summary of Air Emission Factors for Waste Disposal

Pathway		Emission Factors[1]		
Waste Category		**1990**	**2000**	**2005**
MSW	Transit	1.50%	1.50%	1.50%
	Landfilling	2%	2%	2%
	RDF processing and combustion	24%	1%	1%
	Mass burn combustion	91%	23%	25%
	Composting	75%	75%	75%
	Burn Barrels	50%	50%	50%
Infectious Waste	Transit	1%	1%	1%
	Incineration	50%	1%	1%
	Autoclaving	20%	2%	2%
Demolition Debris	Landfilling	2%	2%	2%
Hazardous Waste	-	15%	15%	15%
Sewage Sludge	Incineration	90%	60%	30%
	Land application	50%	50%	50%
	Landfilling	5%	5%	5%
Recycling[2]	-	5%	1%	1%

[1] Emission factors, shown here as percentages, may also be written as numbers less than one, as shown in most flow diagrams. For example, emission factors of 76% and 0.76 are equivalent. The input of mercury to a waste disposal method multiplied by the air emission factor calculates the releases to air for that waste management method.

[2] In lieu of the "generic" emission factors shown here, recycling emission factors specific to certain products were also used.

IV. Results

The primary results of this study are flow diagrams, or quantitative frameworks, that were developed for fourteen mercury-containing products. These are presented here, with written descriptions in Part IVB on the basis for the input to the flow diagrams for each product. Part IVC presents the basis for distribution factors, and Part IVD describes emission factors and how they were derived.

A. Flow Diagrams

Flow diagrams on the following pages are accompanied by supporting data and calculations. Electronic copies of the flow diagrams are also being provided to the MPCA so that the diagrams can be used as a modeling tool. In this section, there are flow diagrams for each product for three separate years: 1990, 2000 and 2005. The "flow" of mercury over time from manufacturer to retailer to consumer to waste moves from left to right across the diagrams. Emissions to air are summarized along the top, emissions to water on the bottom, and "storage" in or on land is shown in the column on the far right. Each flow diagram also includes a summary table that shows total releases to air, land and water for that product.

Note that this version of this report does not contain all of the flow diagrams, but rather just two as examples (fluorescent lamps and fever thermometers diagrammed for 1990, 2000, and 2005). To obtain the other flow diagrams, or to obtain them as Excel spreadsheets, please contact Edward Swain of the Minnesota Pollution Control Agency: edward.swain@pca.state.mn.us

Mercury Flow Diagram
FLUORESCENT LAMPS
1990

15-Aug-01

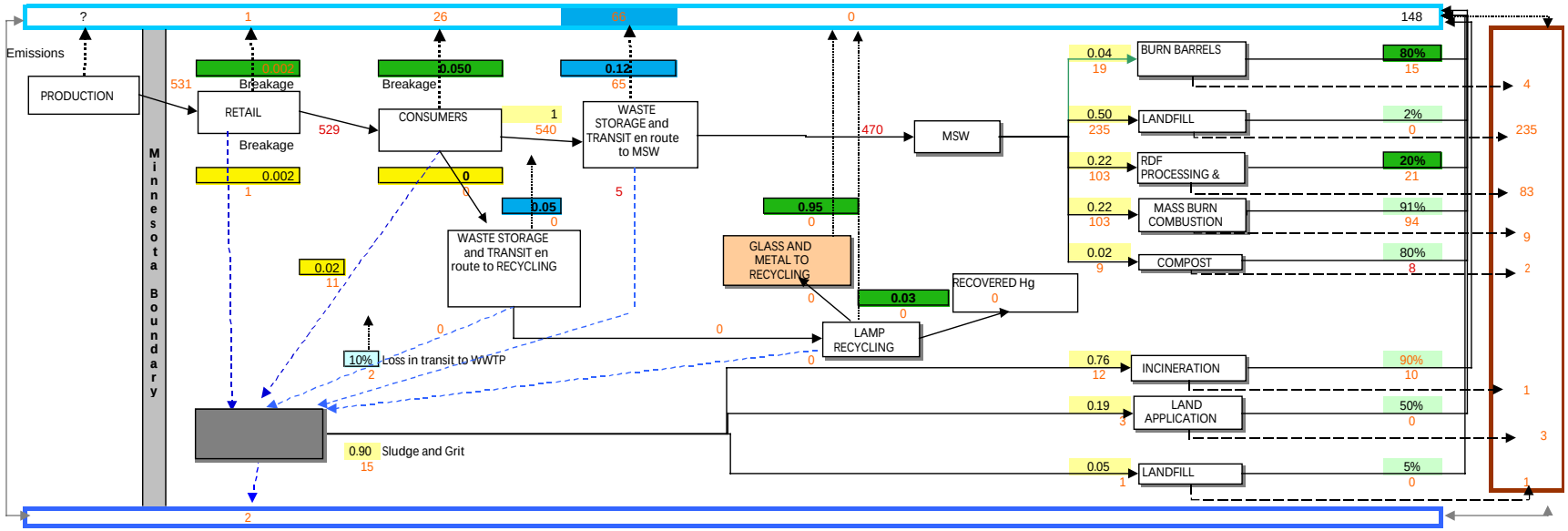

Mercury Releases Summary

Medium	Annual Mercury Releases	
	Mass	Percent of Total Releases
Atmosphere	242 kg	42%
Surface Water	2 kg	0%
Land	333 kg	58%
Total	577 kg	

KEY

Mass Flux	kg/y		
	Adjustable		Fixed
Distribution Factor	DF	*	DF
Emission Factor	EF	*	EF

*adjustable variables within the diagram
use TAB key to move between adjustable cells

CALCULATIONS **1990** **FLUORESCENT LAMPS**

Component	Flowpath		Units	g Hg/unit	Distribution /Emission Factor	kg Hg/y	QA Code*	notes
Production	Output					531	B2	
	Air emissions							Not determined because there are no lamp manufacturers in MN; see footnotes above
Retail	Input	10,626,014	lamps	0.05		531	B2	Calculated based on number of lamps sold (see "Consumer Input"); assumes that 0.5% of lamps
	Breakage losses to:							are broken en route to retail and consumers
	Water Discharge				0.002	1.1	E4	
	Air Emissions				0.002	1.1	C3	Placeholder estimate by Barr; no data found on losses during transit and at retailers
	Output					529	C3	
Consumer	Input	10,573,148	lamps	0.05		529	B3	The number of bulbs sold in 1990 was estimated based on 1995 data
								and 2-3% growth in sales/year; see supporting data.
							B3	Hg content is based on Ref. 1, Table 1, with 20% added to account for larger bulbs
								Avg. Hg content of all fluorescent bulbs is ~25% higher than 4' bulbs; assume overall avg. = 13 in 2000
	Breakage losses to:							All lamps sold in the US in 1999 contained ~13 tons of Hg; 2% of 13 tons = 236 kg
	Water Discharge				0.02	11	E4	Placeholder estimate by Barr, assuming some mercury enters water via washwater
	Air Emissions				0.05	26	C3	Placeholder estimate by Barr, assuming some mercury is lost to air by lamps broken before end of life
	Output	9,315,955	lamps	0.058		540	B3	Ref. 1, Table 1 reports avg. Hg content of 48.2 for 4' FL lamps; Barr added 20% to account for other bulbs
							B3	The number of bulbs sold in 1985 and discarded 1990 = estimated based
								on 1995 data and 2-3% growth in sales/year; see supporting data.
								Due to "storage" (5 year useful life) and changing Hg content, consumer output
								is not equal to input for a given year
	Storage					-49	B3	Calculated
	To Recycling				0	0	C2	See supporting data
	To MSW				1.00	540	C2	Remainder not sent to recycling
Storage, transit and transfer as MSW								
	Input to MSW					540	C2	Equals consumer output to MSW (repeated number)
	Water Discharge				0.01	5	E4	Placeholder estimate by Barr, assuming some mercury enters water via washwater from dumpsters, etc.
	Air Emissions				0.12	65	C3	See supporting data
Disposal as MSW								
	Input					470	C2	
	Burn Barrels							Calculated in diagram using distribution and emission factors from General Data.xls
	Landfill							
	RDF							
	Mass Burn							
	Compost							
Storage, transit and transfer en route to recycling								
	Input					0.0	C2	
	Water Discharge				0.01	0	E4	Placeholder estimate by Barr, assuming some mercury enters water via washwater from dumpsters, etc.
	Air Emissions				0.05	0	C2	Placeholder estimate by Barr, assuming few lamps are broken than when disposed in MSW
Lamp Recycling								
	Input					0	C2	
	Water Discharge				0.01	0	E4	Placeholder estimate by Barr, assuming some mercury enters water via washwater from dumpsters, etc.
	Air Emissions				0.03	0	C2	See supporting data
	Recycled products	-	lamps	0.0015		0	C3	NEMA estimated 1.5 mg Hg/lamp is in glass, plus a small amount in metal
								Ref. 1 reports that the primary market for lamp glass is asphalt filler.
								MPCA staff stated that most glass from MN lamp recyclers goes to a fiberglass mfr. Plant.
	Recovered Hg					0	C3	100 kg of Hg equates to roughly 3,448,000 lamps at 0.029 g/lamp
Wastewater Treatment								
	Input					17	E4	Sum of discharges to water; assumes that most Hg is in washwater sent to a WWTP,
	Output							not discharged directly to ground or surface waters
	Sludge				0.90	15.3	E4	See General Datal.xls, Distribution Factors
	Effluent				0.10	1.7	E4	See General Datal.xls, Distribution Factors
Sludge Disposal								
								See General Data.xls, Distribution Factor and Emission Factor sheets

* see QA sheet

Mercury Flow Diagram
FLUORESCENT LAMPS
2000

15-Aug-01

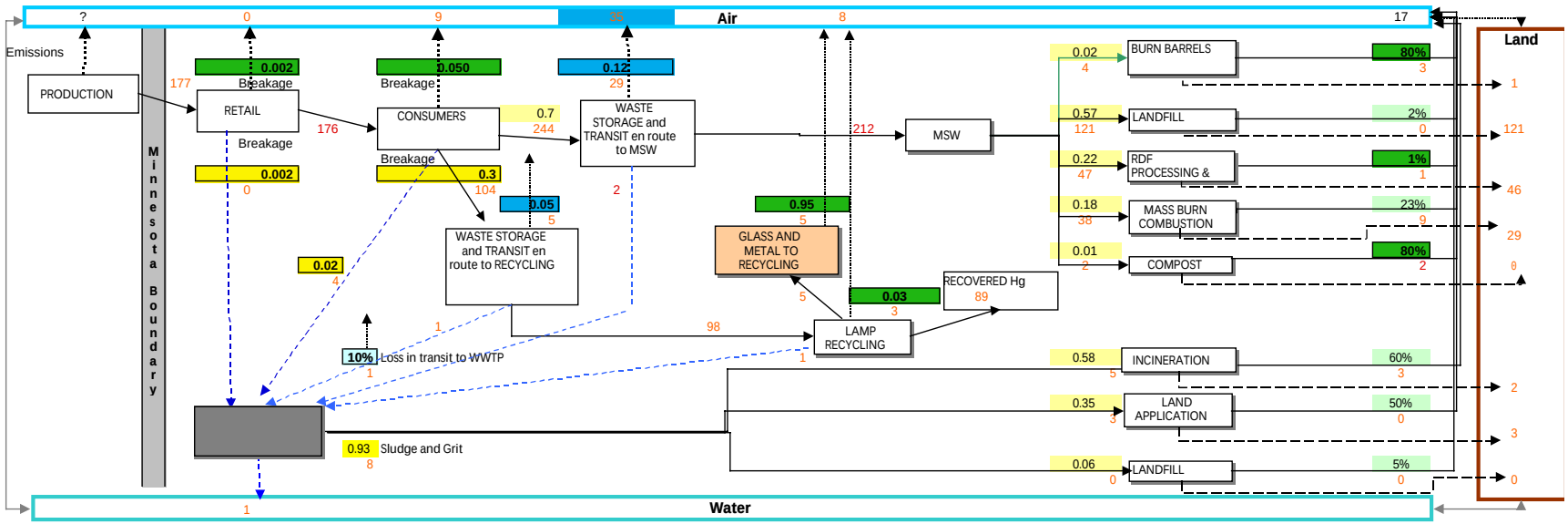

Mercury Releases Summary

Medium	Annual Mercury Releases	
	Mass	Percent of Total Releases
Atmosphere	70 kg	26%
Surface Water	1 kg	0%
Land	202 kg	74%
Total	272 kg	

KEY

Mass Flux	kg/y	
	Adjustable	Fixed
Distribution Factor	DF *	DF
Emission Factor	EF *	EF

*adjustable variables within the diagram
use TAB key to move between adjustable cells

CALCULATIONS **2000** **FLUORESCENT LAMPS**

Component	Flowpath		Units	g Hg/unit	Distribution /Emission Factor	kg Hg/y	QA Code*	notes
Production	Output					177	B2	
	Air emissions							Not determined because there are no lamp manufacturers in MN; see footnotes above
Retail	Input	13,644,783	lamps	0.013		177	B2	Calculated based on number of lamps sold (see "Consumer Input"); assumes that 0.5% of lamps
	Breakage losses to:							are broken en route to retail and consumers
	Water Discharge				0.002	0.4	E4	
	Air Emissions				0.002	0.4	C3	Placeholder estimate by Barr; no data found on losses during transit and at retailers
	Output					177	C3	
Consumer	Input	13,576,899	lamps	0.013		176.5	B2	600 million lamps were sold in 1995 in the US; industry growth = 2-3%/year (Ref 1); see supporting data
								Hg content in 1999 avg. for 4' lamp = 11.6 mg/lamp; Philips ALTO 4' bulb is <5 mg;
								Avg. Hg content of all fluorescent bulbs is ~25% higher than 4' bulbs; assume overall avg. = 13 in 2000
	Breakage losses to:							All lamps sold in the US in 1999 contained ~13 tons of Hg; 2% of 13 tons = 236 kg
	Water Discharge				0.02	4	E4	Placeholder estimate by Barr, assuming some mercury enters water via washwater
	Air Emissions				0.05	9	C3	Placeholder estimate by Barr, assuming some mercury is lost to air by lamps broken before end of life
	Output	12,000,000	lamps	0.029		348	B2	Ref. 1, Table 2 reports Hg in lamps in 1995 avg. 29 mg/lamp, and that a 4'lamp avg. life = 5 years
								600 million lamps were sold in 1995 in the US (disposed in 2000)
								x avg. Hg content x MN percent of national economy (2%)
								Due to "storage" (5 year useful life) and changing Hg content, consumer outpu
								is not equal to input for a given year
	Storage					-184	B3	Calculated
	To Recycling				0.3	104	C2	See supporting data
	To MSW				0.70	244	C2	Remainder not sent to recycling
Storage, transit and transfer as MSW								
	Input to MSW					244	C2	Equals consumer output to MSW (repeated number)
	Water Discharge				0.01	2	E4	Placeholder estimate by Barr, assuming some mercury enters water via washwater from dumpsters, etc.
	Air Emissions				0.12	29	C3	See supporting data
Disposal as MSW								
	Input					212	C2	
	Burn Barrels							Calculated in diagram using distribution and emission factors from General Data.xls
	Landfill							
	RDF							
	Mass Burn							
	Compost							
Storage, transit and transfer en route to recycling								
	Input					104.4	C2	
	Water Discharge				0.01	1	E4	Placeholder estimate by Barr, assuming some mercury enters water via washwater from dumpsters, etc.
	Air Emissions				0.05	5	C2	Placeholder estimate by Barr, assuming few lamps are broken than when disposed in MSW
Lamp Recycling								
	Input					98	C2	
	Water Discharge				0.01	1	E4	Placeholder estimate by Barr, assuming some mercury enters water via washwater from dumpsters, etc.
	Air Emissions				0.03	3	C2	See supporting data
	Recycled products	3,600,000	lamps	0.0015		5	C3	NEMA estimated 1.5 mg Hg/lamp is in glass, plus a small amount in metal
								Ref. 1 reports that the primary market for lamp glass is asphalt filler.
								MPCA staff stated that most glass from MN lamp recyclers goes to a fiberglass mfr. Plant.
	Recovered Hg					89	C3	100 kg of Hg equates to roughly 3,448,000 lamps at 0.029 g/lamp
Wastewater Treatment								
	Input					8	E4	Sum of discharges to water; assumes that most Hg is in washwater sent to a WWTP,
	Output							not discharged directly to ground or surface waters
	Sludge				0.93	7.8	E4	See General Datal.xls, Distribution Factors
	Effluent				0.07	0.6	E4	See General Datal.xls, Distribution Factors
Sludge Disposal								
								See General Data.xls, Distribution Factor and Emission Factor sheets

* see QA sheet

Mercury Flow Diagram
FLUORESCENT LAMPS
2005

15-Aug-01

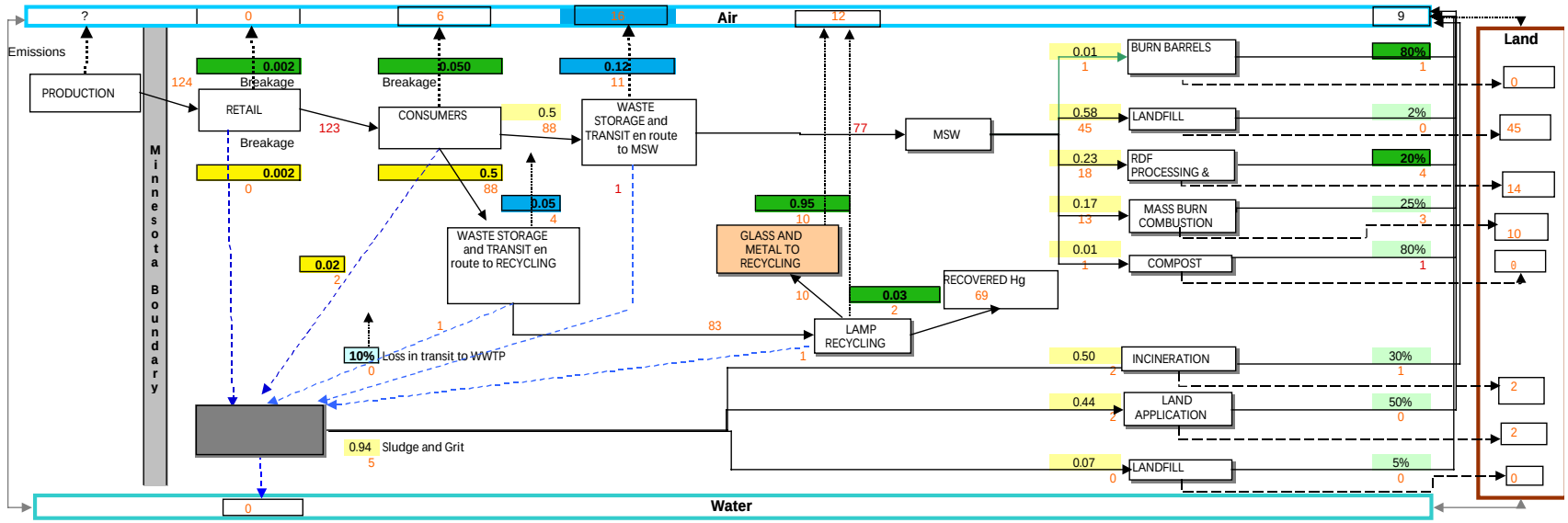

Mercury Releases Summary	Annual Mercury Releases Mass	Percent of Total Releases
Atmosphere	43 kg	37%
Surface Water	0 kg	0%
Land	73 kg	63%
Total	116 kg	

KEY

Mass Flux	kg/y	
	Adjustable	Fixed
Distribution Factor	DF *	DF
Emission Factor	EF *	EF

*adjustable variables within the diagram
use TAB key to move between adjustable cells

CALCULATIONS **for 2005** **FLUORESCENT LAMPS**

Component	Flowpath		Units	g Hg/unit	Distribution /Emission Factor	kg Hg/y	QA Code*	notes
Production	Output					124	B2	
	Air emissions							Not determined because there are no lamp manufacturers in MN; see footnotes above
Retail	Input	15,437,820	lamps	0.008		124	B2	Calculated based on number of lamps sold (see "Consumer Input"); assumes that 0.5% of lamps
	Breakage losses to:							are broken en route to retail and consumers
	Water Discharge				0.002	0.2	E4	
	Air Emissions				0.002	0.2	C3	Placeholder estimate by Barr; no data found on losses during transit and at retailers
	Output					123	C3	
Consumer	Input	15,361,015	lamps	0.008		123	B3	The number of bulbs sold in 2005 was estimated based on 1995 data and 2-3% growth in sales/year; see supporting data.
							B3	Hg content estimated by Barr, given that many bulbs are <5 mg/bulb in 2001
								Avg. Hg content of all fluorescent bulbs is ~25% higher than 4' bulbs; assume overall avg. = 13 in 2000
	Breakage losses to:							All lamps sold in the US in 1999 contained ~13 tons of Hg; 2% of 13 tons = 236 kg
	Water Discharge				0.02	2	E4	Placeholder estimate by Barr, assuming some mercury enters water via washwater
	Air Emissions				0.05	6	C3	Placeholder estimate by Barr, assuming some mercury is lost to air by lamps broken before end of life
	Output	13,576,899	lamps	0.013		176	B3	Ref. 1, Table 1 reports avg. Hg content of 48.2 for 4' FL lamps; Barr added 20% to account for other bulbs
							B3	The number of bulbs sold in 1985 and discarded 1990 = estimated based on 1995 data and 2-3% growth in sales/year; see supporting data.
								Due to "storage" (5 year useful life) and changing Hg content, consumer output is not equal to input for a given year
	Storage					-62	B3	Calculated
	To Recycling				0.5	88	C2	See supporting data
	To MSW				0.50	88	C2	Remainder not sent to recycling
Storage, transit and transfer as MSW								
	Input to MSW					88	C2	Equals consumer output to MSW (repeated number)
	Water Discharge				0.01	1	E4	Placeholder estimate by Barr, assuming some mercury enters water via washwater from dumpsters, etc.
	Air Emissions				0.12	11	C3	See supporting data
Disposal as MSW								
	Input					77	C2	
	Burn Barrels							Calculated in diagram using distribution and emission factors from General Data.xls
	Landfill							
	RDF							
	Mass Burn							
	Compost							
Storage, transit and transfer en route to recycling								
	Input					88.2	C2	
	Water Discharge				0.01	1	E4	Placeholder estimate by Barr, assuming some mercury enters water via washwater from dumpsters, etc.
	Air Emissions				0.05	4	C2	Placeholder estimate by Barr, assuming few lamps are broken than when disposed in MSW
Lamp Recycling								
	Input					83	C2	
	Water Discharge				0.01	1	E4	Placeholder estimate by Barr, assuming some mercury enters water via washwater from dumpsters, etc.
	Air Emissions				0.03	2	C2	See supporting data
	Recycled products	6,788,449	lamps	0.0015		10	C3	NEMA estimated 1.5 mg Hg/lamp is in glass, plus a small amount in metal
								Ref. 1 reports that the primary market for lamp glass is asphalt filler.
								MPCA staff stated that most glass from MN lamp recyclers goes to a fiberglass mfr. Plant.
	Recovered Hg					69	C3	100 kg of Hg equates to roughly 3,448,000 lamps at 0.029 g/lamp
Wastewater Treatment								
	Input					5	E4	Sum of discharges to water; assumes that most Hg is in washwater sent to a WWTP,
	Output							not discharged directly to ground or surface waters
	Sludge				0.94	5.0	E4	See General Data1.xls, Distribution Factors
	Effluent				0.06	0.3	E4	See General Data1.xls, Distribution Factors
Sludge Disposal								See General Data.xls, Distribution Factor and Emission Factor sheets

* see QA sheet

Support Data and Calculations for Mercury Flow Diagram
FLUORESCENT LAMPS
Additional Supporting Data and Explanation of Calculations, Assumptions and Estimates for Fluorescent Lamps

Production and Consumer Input

Ref. 1 — Approximately 600,000,000 fluorescent lamps were sold in 1995 in the US.
Ref. 6 — Approximately 550,000,000 lamps with Hg were sold in 1992 in the US. Of these approximately
Ref. 6 — 22 million were HID variety and most of the rest are fluorescent.
Ref 1 — Lamp industry growth = 2-3% per year

Predicted Fluorescent Lamp Sales — assuming 2.5% increase in sales per year — Units: numbers of lamps

year:	1990	1991	1992	1993	1994	1995	1996	1997	1998	1999	2000	2001	2002	2003	2004
10308820	10573148	10844255	11122313	11407500	11700000	12000000	12300000	12607500	12922688	13245754.7	13576899	13916321	14264229	14620835	14986356

Consumer Output

1985	1986	1987	1988	1999
9315955	9554826.1	9799822	10051099	10308820

Ref. 6 — EPA cites Ref. 6 as reporting an estimated 24.3 Mg of Hg in discarded lamps in 1989.
Ref. 8 — NEMA reports Hg in lamps disposed in US in 1995 was 27 tonnes

Loss due to breakage during use by consumer

Ref. 10 — MPCA Duluth staff found during 218 site visits between March 1999 and Spring 2001 that improper fluorescent lamp storage at 112 sites. This was the most common violation.

Loss during storage, transit and transfer to MSW disposal

Ref. 9 (1997) — US EPA modeling predicted that 6% of mercury is lost in transit to MSW disposa
Ref. 4 (2000) — Aucott (NJ DEP) reported a loss of 5% of lamp Hg within 12 hours, and 12% within 2 weeks.
Ref. 1 (1996) — GE believes that 1% loss of Hg from lamps broken during storage, transport and landfilling is conservative. GE references studies by the Lawrence Berkeley Laboratory (1994), and Tetra Tech/Frontier Geosciences, 19
Ref. 7 (1999) — Lindberg estimates that each broken bulb could release 20 to 80% of its Hg

Barr assumes that:

the average time that a broken bulb spends in waste on-site (avg. waste pick up is 1/week):	3 days =	72	hours
average time between waste pick-up and delivery to MSW disposal facility for waste not handled at transfer stations:		6	hours
average time between waste pick-up and delivery to MSW disposal facility for waste handled at transfer stations is:		15	hours

1997 waste quantity received by MN MSW transfer stations = 940,000 tons in 1997 of approx. 3,000,000 tons of MSW managed at permitted facilities = 30%
The amount of waste handled at transfer stations has increased since 1990 and will rise in 2005 as more landfills close

Time en route = storage on-site + transit + transfer

Estimate of time in transit and transfer = 7 to 10 hours as calculated below
Basis for calculations shown at right:
Barr estimated the percentage of waste transferred in 1990 and 2005; figures for 2000 are based o
1999 data found in the following document:
MnOEA Report on 1999 SCORE Programs [http://www.moea.state.mn.us/lc/score99.cfm]

Year	Total tons of MSW in MN	Tons to transfer sta.	fraction handled at TS	hours en route to disposal	fraction taken direct to disposal	hours en route to disposal	Average hours
1990			0.15	15	0.85	6	7
2000	3,086,834	940,000	0.30	15	0.70	6	9
2005			0.4	15	0.60	6	10

Estimated emission factor (loss to air) from lamps en route to MSW Disposal

Basis: total time in storage and transit appears to be approx. 3.5 days. Waste that experiences more crushing and agitation (e.g., transfer) can be expected to have higher Hg emissions to air.

Year	Time in Storage on-site	Time in transit and transfer	Total Time		Fraction of waste transferred
1990	72	7	79	hours	0.15
2000	72	9	81		0.30
2005	72	10	82		0.4

Estimated emission factor for Hg in lamps released to air en route to disposal as MSW
0.08
0.12
0.13

Distribution to MSW vs. recycling

Ref. 5 — The Assoc. of Lighting and Mercury Recyclers reported in 2001 that national lamp recycling rate is 20%.
Barr expects that MN has a higher than average recycling rate due to Hg reduction efforts.
Ref. 6 — Flow chart by EPA based on 1993 report (Ref. 6) predicts a 2% recycling rate.

Recycling rate estimates by Barr

	1990	2000	2005
To lamp recyclers	0.01	0.3	0.5
To MSW disposal	0.99	0.7	0.5

Fate of Hg in recycled lamp products

Ref. 1 — GE reports that Hg is embedded in the phosphor powder, lamp glass and may be in the aluminum endcaps recovered from spent lamps.
Ref. 3 — NEMA estimates that, of the total Hg in lamp, 0.1 mg to >3 mg is in glass, averaging 1.5 mg/lamp. The remaining Hg is in the phosphor powder and combined with other internal metal components.
Ref. 3 — "Mercury will be released if recovered glass is re-heated or re-melted, with evolution rates as high as 7 mg/hour per kg of glass."
Ref. 11 — MPCA agreement would limit Hg in glass to an average level of 4 ppm

Loss during bulb recycling

Ref. 4 — Aucott reports that his experiments sampling emissions from broken tubes found at 40F about 12% of mercury in lamps is emitted within 2 weeks, about 5% in the first 12 hours.
Beierwaltes reports testing lamp recycling at the point of exhaust (0.045 mg/m3 after 820 lamps crushed, over an 8 hour period), and in operator breathing zone (0.002 mg/m3 after 450 lamps in 8 hour period).
The filter system capture efficiency is estimated based on testing to capture 98.9% of mercury vapor, or that 1.1% of vapor was released.
Ref. 6 — EPA flowchart based on Ref. 6 assumes that 1% of Hg is lost to air during recycling, while 2% is lost en route to recycling.

Ref. 4 — Air Cycle estimates that 1.1% of Hg is not caught by that manufacturer's bulb eater;
Barr added 5% due to breakage on-site, emissions from recovered glass, etc.;

Loss from incinerator ash (not accounted for)

Ref. 1 — GE states that the small amount of Hg remaining in incinerator ash would have negligible releases once landfilled as with other landfilling scenarios.
Barr comment: this assumption does not account for the fact that, in MN, incinerator ash is not covered daily like MSW landfills are

References for Mercury Flow Diagram
FLUORESCENT LAMPS

#	Reference	Review Notes
1	Howley, Joseph, GE Lighting. Letter to US EPA dated August 20, 1996.	
2	US EPA Municipal and Industrial Solid Waste Division, Office of Solid Wastes. Characterization of Products Containing Mercury in Municipal Solid Waste in the United States, 1970 to 2000. March 1992.	lamps account for 0.09% of all solid waste.
3	NEMA. "Mercury Content of Residues from Lamp Reclamation." September 1994. Cited in Ref. 1 (Howley).	
4	Email from Ed Swain to Barr Engineering dated 3/7/01, with attached emails from Michael Aucott (NJ DEP, 12/1/00), Joe Carruth (MPCA, 11/30/00), and Scott Beierwaltes (Air Cycle, 11/22/00).	
5	Association of Lighting and Mercury Recyclers. Association of Lighting and Mercury Recyclers Launches Website to Promote Mercury Lamp Recycling. Press release dated February 26, 2001.	Nationally, the [lamp] recycling rate is about 20%, accd. To ALMR. Almost 80% are still disposed of in MSW. Purpose of the website = education and outreach to improve FL recycling rates
6	Truesdale, Beaulieu, and Pierson, Research Triangle Institute. "Management of Used Fluorescent Lamps: Preliminary Risk Assessment". May 1993. Cited in Ref. 117.	
7	Lindberg, et al, ORNL, UCF and FL DEP. ORNL Sampling Operations Summary and Preliminary Data Report for PaMSWaD-I, Brevard County Landfill. February 6, 1999.	
8	KEMI report.	
9	US EPA Mercury Study Report to Congress, Volume II. 1997. EPA-452/R-97-004	
10	MPCA. Minnesota Environment. Vol. 1, No. 3, Spring 2001.	
11	MPCA. Draft Compliance Agreement for a Waste Lamps Processing Facility (December 1998)	

Mercury Flow Diagram
FEVER THERMOMETERS
1990

15-Aug-01

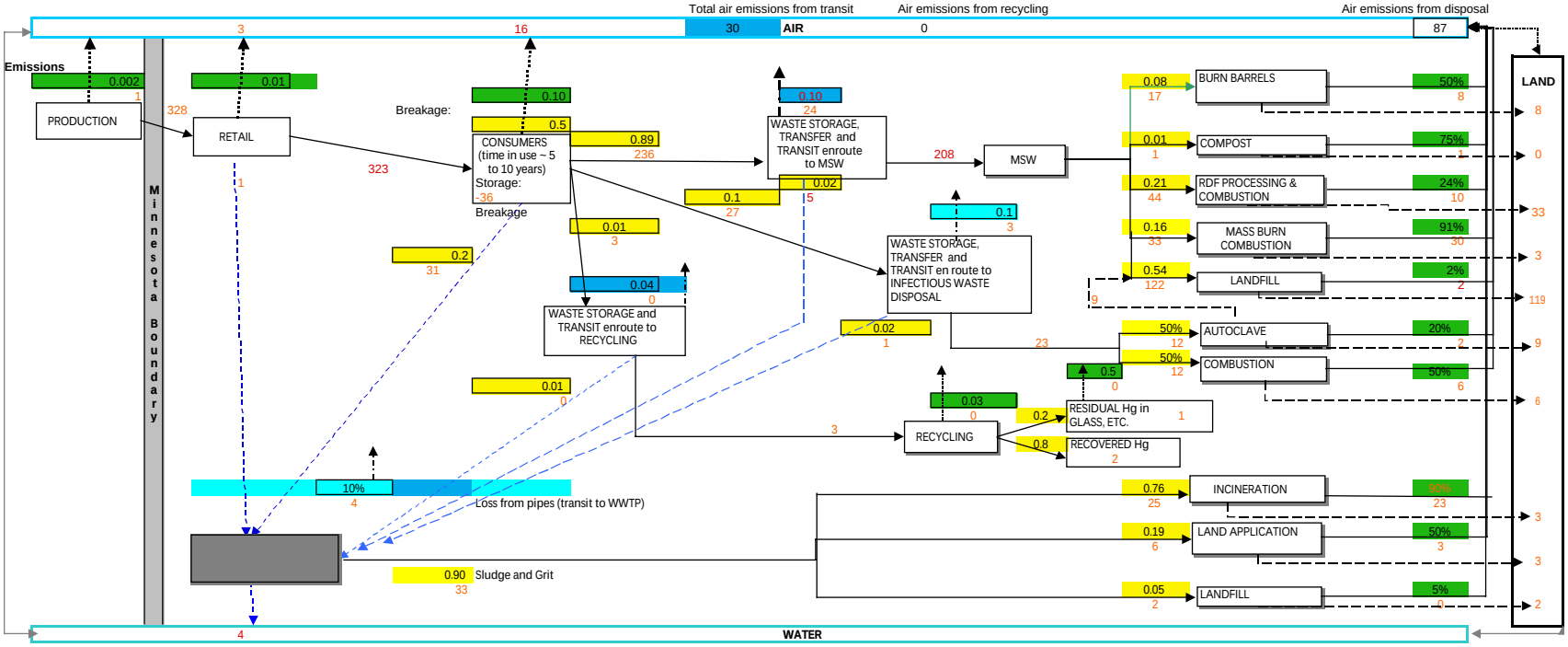

Mercury Releases Summary

Medium	Annual Mercury Releases Mass (kg)	Percent
Atmosphere	136	42%
Surface Water	4	1%
Land	187	57%
Total	326	

Key

Mass Flux	kg/y	
	Adjustable	Fixed
Distribution Factor	DF *	DF
Emission Factor	EF *	EF

*adjustable variables within the diagram
use TAB key to move between adjustable cells

CALCULATIONS

Component / Flow Path		Units	g Hg/unit	distribution /emission factor	kg Hg/y	QA Score*	notes
Production							
Output	473,661	thermometers	0.7		327.8	D1	Back-calculated based on estimated losses from production to consumer
Air emissions				0.002	0.6	B2	Based on Ref. 3 (ORNL) testing at one manufacturer in Michigan that predicted loss of 1 to 2 grams/day in 2001.
Retail							
Input					327	C2	Calculated (production output minus air emissions)
Breakage losses to:							
Water Discharge				0.002	0.6	E4	Placeholder estimate by Barr
Air Emissions				0.01	3.2	E4	Placeholder estimate by Barr
Output					323	C2	Calculated
Consumer							
Input from purchases	466,000	thermometers	0.7		323	C2	Estimates by Barr of Year 2000 mercury thermometer purchases based on Ref. 1; see supporting data
Output = purchases 5 years prior	466000	thermometers	0.7		312	C2	Estimates taken from data provided in Ref. 1
Percent Broken				0.5		E4	
Broken					156	E4	Calculated as percent broken * quantity of Hg purchased 5 years prior
Unbroken					156	E4	Calculated as percent unbroken * quantity of Hg purchased 5 years prior
Breakage losses to:							
Water Discharge				0.200	31.2	E4	Placeholder estimate by Barr, assuming that some spilled mercury is put in toilets or sinks
Air Emissions				0.100	16	E4	Placeholder estimate by Barr, assuming some mercury from spills is lost through volatilization,
Remaining Hg from broken thermometers					109		
To Recycling				0.01	3	C2	DF estimated based on # of thermometers collected by WLSSD (see supporting data) multiplied by "remaining Hg" + Hg from unbroken thermometers
To MSW				0.89	236	D3	DF estimated by Barr, multiplied by "remaining Hg" + Hg from unbroken thermometers
To infectious Waste				0.10	27	D3	DF estimated by Barr, multiplied by "remaining Hg" + Hg from unbroken thermometers
Storage					-36	D3	Calculated as inputs - outputs, including losses to air and water from breakage
Storage, transit and transfer as MSW							
Input to MSW					236		From above
Water Discharge				0.01	2	E4	Placeholder estimate by Barr, assuming that some mercury is washed from dumpsters, etc., to WWTP (and stormwater…)
Air Emissions				0.10	24	E4	Placeholder estimate by Barr
Disposal as MSW							
Input					210		From above
Burn Barrels							See General Data.xls for distribution factors and emission factors
Landfill							See General Data.xls for distribution factors and emission factors
RDF							See General Data.xls for distribution factors and emission factors
Mass Burn							See General Data.xls for distribution factors and emission factors
Compost							See General Data.xls for distribution factors and emission factors
Storage, transit and transfer en route to recycling							
Input					3		From above
Water Discharge				0.01	0	E4	Placeholder estimate by Barr, assuming that some mercury is washed from dumpsters, etc., to WWTP (and stormwater…)
Air Emissions				0.04	0	E4	Placeholder estimate by Barr
Mercury Recycling							
Input					3		From above
Water Discharge				0.01	0	E4	Placeholder estimate by Barr, assuming some mercury enters water via washwater from dumpsters, etc.
Air Emissions				0.03	0	E4	Placeholder estimate by Barr
Switch glass				0.03	0	E4	Placeholder estimate by Barr; the fate of the glass from the switches was not determined
Recovered Hg					2	E1	
Storage, transit and transfer as infectious waste							
Input					27		From above
Water Discharge				0.02	1	E4	Placeholder estimate by Barr, assuming some mercury enters water via washwater from dumpsters, etc.
Air Emissions				0.1	3	E4	Placeholder estimate by Barr
Wastewater Treatment							
Input					37	E4	Sum of discharges to water; assumes that most Hg is in washwater sent to a WWTP, not discharged directly to ground or surface waters
Output							
Sludge					33		See General Datal.xls, Distribution Factors
Effluent					4		See General Datal.xls, Distribution Factors
Sludge Disposal					33		See General Data.xls, Distribution Factor and Emission Factor sheets

* See QA Worksheet

Mercury Flow Diagram
FEVER THERMOMETERS
2000

15-Aug-01

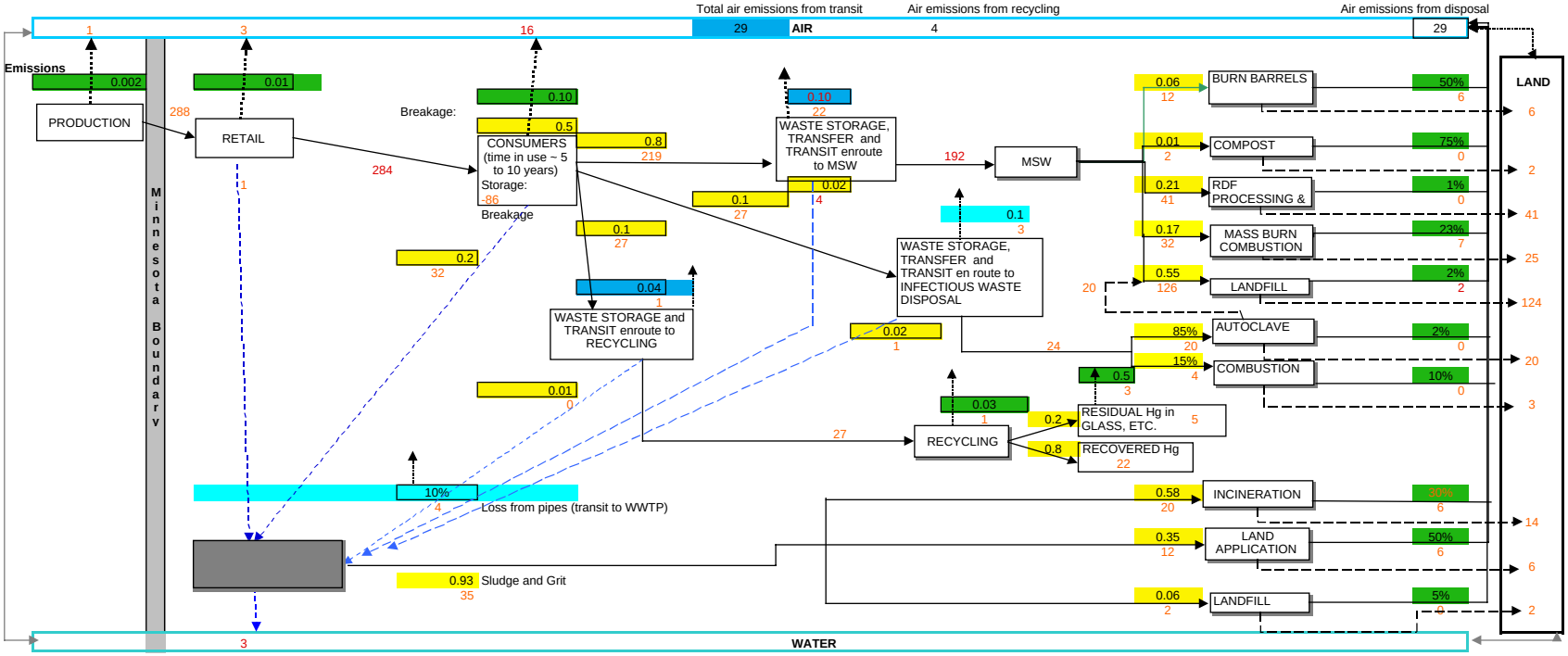

Mercury Releases Summary

Medium	Annual Mercury Releases Mass (kg)	Percent
Atmosphere	81	25%
Surface Water	3	1%
Land	243	74%
Total	327	

Key

Mass Flux	kg/y		
	Adjustable		Fixed
Distribution Factor	DF	*	DF
Emission Factor	EF	*	EF

*adjustable variables within the diagram
use TAB key to move between adjustable cells

CALCULATIONS

Component / Flow Path		Units	g Hg/unit	distribution /emission factor	kg Hg/y	QA Score*	notes
Production							
Output	415,740	thermometers	0.7		287.7	D1	Back-calculated based on estimated losses from production to consumer
Air emissions				0.002	0.6	B2	Based on Ref. 3 (ORNL) testing at one manufacturer in Michigan that predicted loss of 1 to 2 grams/day in 2001.
Retail							
Input					287	C2	Calculated (production output minus air emissions)
Breakage losses to:							
Water Discharge				0.002	0.6	E4	Placeholder estimate by Barr
Air Emissions				0.01	2.8	E4	Placeholder estimate by Barr
Output					284	C2	Calculated
Consumer							
Input from purchases	410,000	thermometers	0.7		284	C2	Estimates by Barr of Year 2000 mercury thermometer purchases based on Ref. 1; see supporting data
Output = purchases 5 years prior	464000	thermometers	0.7		321	C2	Estimates taken from data provided in Ref. 1
Percent Broken				0.5		E4	
Broken					161	E4	Calculated as percent broken * quantity of Hg purchased 5 years prior
Unbroken					161	E4	Calculated as percent unbroken * quantity of Hg purchased 5 years prior
Breakage losses to:							
Water Discharge				0.200	32.1	E4	Placeholder estimate by Barr, assuming that some spilled mercury is put in toilets or sinks
Air Emissions				0.100	16	E4	Placeholder estimate by Barr, assuming some mercury from spills is lost through volatilization,
Remaining Hg from broken thermometers					113		
To Recycling				0.10	27	C2	DF estimated based on # of thermometers collected by WLSSD (see supporting data) multiplied by "remaining Hg" + Hg from unbroken thermometers
To MSW				0.80	219	D3	DF estimated by Barr, multiplied by "remaining Hg" + Hg from unbroken thermometers
To infectious Waste				0.10	27	D3	DF estimated by Barr, multiplied by "remaining Hg" + Hg from unbroken thermometers
Storage					-86	D3	Calculated as inputs - outputs, including losses to air and water from breakage
Storage, transit and transfer as MSW							
Input to MSW					219		From above
Water Discharge				0.01	2	E4	Placeholder estimate by Barr, assuming that some mercury is washed from dumpsters, etc., to WWTP (and stormwater…)
Air Emissions				0.10	22	E4	Placeholder estimate by Barr
Disposal as MSW							
Input					195		From above
Burn Barrels							See General Data.xls for distribution factors and emission factors
Landfill							See General Data.xls for distribution factors and emission factors
RDF							See General Data.xls for distribution factors and emission factors
Mass Burn							See General Data.xls for distribution factors and emission factors
Compost							See General Data.xls for distribution factors and emission factors
Storage, transit and transfer en route to recycling							
Input					27		From above
Water Discharge				0.01	0	E4	Placeholder estimate by Barr, assuming that some mercury is washed from dumpsters, etc., to WWTP (and stormwater…)
Air Emissions				0.04	1	E4	Placeholder estimate by Barr
Mercury Recycling							
Input					26		From above
Water Discharge				0.01	0	E4	Placeholder estimate by Barr, assuming some mercury enters water via washwater from dumpsters, etc.
Air Emissions				0.03	1	E4	Placeholder estimate by Barr
Switch glass				0.03	1	E4	Placeholder estimate by Barr; the fate of the glass from the switches was not determined
Recovered Hg					24	E1	
Storage, transit and transfer as infectious waste							
Input					27		From above
Water Discharge				0.02	1	E4	Placeholder estimate by Barr, assuming some mercury enters water via washwater from dumpsters, etc.
Air Emissions				0.1	3	E4	Placeholder estimate by Barr
Wastewater Treatment							
Input					38	E4	Sum of discharges to water; assumes that most Hg is in washwater sent to a WWTP, not discharged directly to ground or surface waters
Output							
Sludge					35		See General Datal.xls, Distribution Factors
Effluent					3		See General Datal.xls, Distribution Factors
Sludge Disposal					35		See General Data.xls, Distribution Factor and Emission Factor sheets

* See QA Worksheet

Mercury Flow Diagram
FEVER THERMOMETERS
2005

15-Aug-01

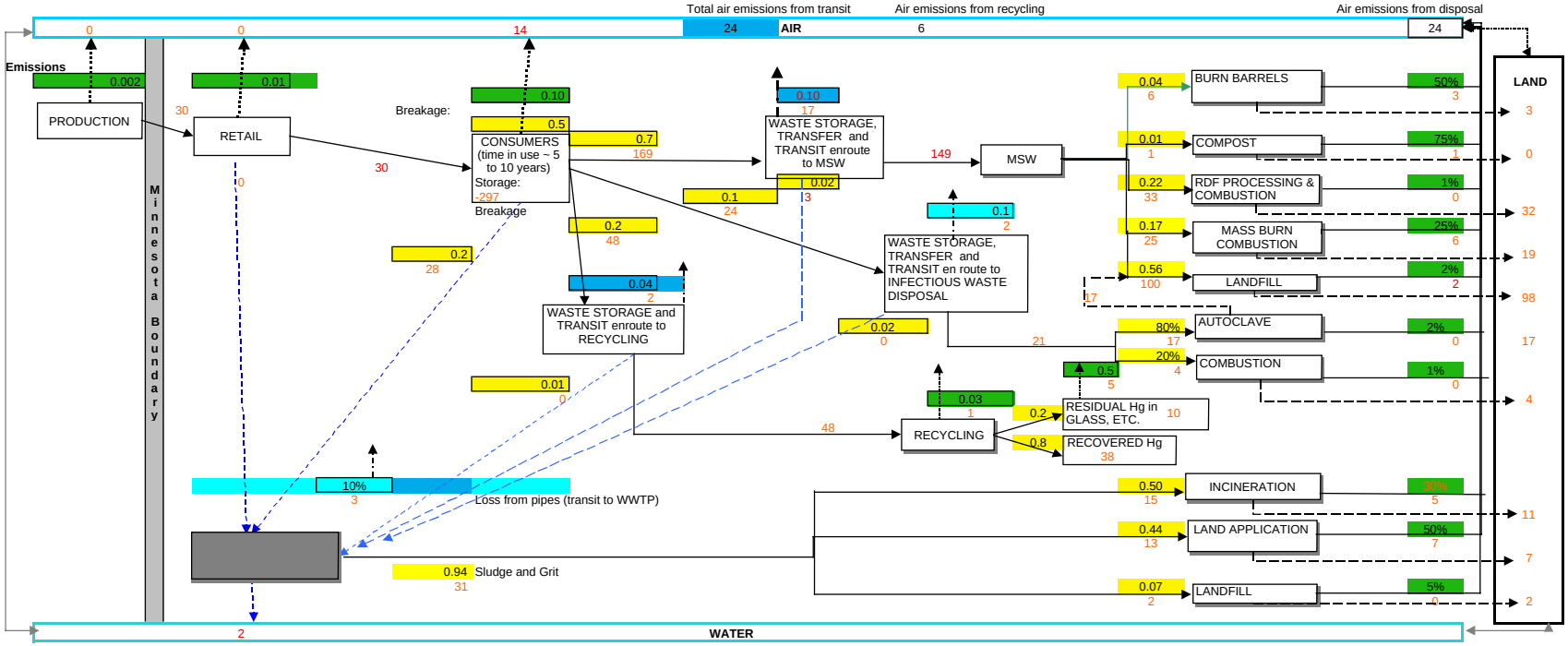

Mercury Releases Summary

Medium	Annual Mercury Releases Mass (kg)	Percent
Atmosphere	70	26%
Surface Water	2	1%
Land	193	73%
Total	264	

KEY

Mass Flux	kg/y	
	Adjustable	Fixed
Distribution Factor	DF *	DF
Emission Factor	EF *	EF

*adjustable variables within the diagram
use TAB key to move between adjustable cells

CALCULATIONS **FEVER THERMOMETERS**

Component / Flow Path		Units	g Hg/unit	distribution /emission factor	kg Hg/y	QA Score*	notes
Production							
Output	43,602	thermometers	0.7		30.2	D1	Back-calculated based on estimated losses from production to consumer
Air emissions				0.002	0.1	B2	Based on Ref. 3 (ORNL) testing at one manufacturer in Michigan that predicted loss of 1 to 2 grams/day in 2001.
Retail							
Input					30	C2	Calculated (production output minus air emissions)
Breakage losses to:							
Water Discharge				0.002	0.1	E4	Placeholder estimate by Barr
Air Emissions				0.01	0.3	E4	Placeholder estimate by Barr
Output					30	C2	Calculated
Consumer							
Input from purchases	43,000	thermometers	0.7		30	C2	Estimates by Barr of Year 2000 mercury thermometer purchases based on Ref. 1; see supporting data
Output = purchases 5 years prior	466,000	thermometers	0.7		284	C2	Estimates taken from data provided in Ref. 1
Percent Broken				0.5		E4	
Broken					142	E4	Calculated as percent broken * quantity of Hg purchased 5 years prior
Unbroken					142	E4	Calculated as percent unbroken * quantity of Hg purchased 5 years prior
Breakage losses to:							
Water Discharge				0.200	28.4	E4	Placeholder estimate by Barr, assuming that some spilled mercury is put in toilets or sinks
Air Emissions				0.100	14	E4	Placeholder estimate by Barr, assuming some mercury from spills is lost through volatilization,
Remaining Hg from broken thermometers					99		
To Recycling				0.20	48	C2	DF estimated based on # of thermometers collected by WLSSD (see supporting data) multiplied by "remaining Hg" + Hg from unbroken thermometers
To MSW				0.70	169	D3	DF estimated by Barr, multiplied by "remaining Hg" + Hg from unbroken thermomet
To infectious Waste				0.10	24	D3	DF estimated by Barr, multiplied by "remaining Hg" + Hg from unbroken thermomet
Storage					-297	D3	Calculated as inputs - outputs, including losses to air and water from breakage
Storage, transit and transfer as MSW							
Input to MSW					169		From above
Water Discharge				0.01	2	E4	Placeholder estimate by Barr, assuming that some mercury is washed from dumpsters, etc., to WWTP (and stormwater…)
Air Emissions				0.10	17	E4	Placeholder estimate by Barr
Disposal as MSW							
Input					150		From above
Burn Barrels							See General Data.xls for distribution factors and emission factors
Landfill							See General Data.xls for distribution factors and emission factors
RDF							See General Data.xls for distribution factors and emission factors
Mass Burn							See General Data.xls for distribution factors and emission factors
Compost							See General Data.xls for distribution factors and emission factors
Storage, transit and transfer en route to recycling							
Input					48		From above
Water Discharge				0.01	0	E4	Placeholder estimate by Barr, assuming that some mercury is washed from dumpsters, etc., to WWTP (and stormwater…)
Air Emissions				0.04	2	E4	Placeholder estimate by Barr
Mercury Recycling							
Input					46		From above
Water Discharge				0.01	0	E4	Placeholder estimate by Barr, assuming some mercury enters water via washwater from dumpsters, etc.
Air Emissions				0.03	1	E4	Placeholder estimate by Barr
Switch glass				0.03	1	E4	Placeholder estimate by Barr; the fate of the glass from the switches was not determined
Recovered Hg					43	E1	
Storage, transit and transfer as infectious waste							
Input					24		From above
Water Discharge				0.02	0	E4	Placeholder estimate by Barr, assuming some mercury enters water via washwater from dumpsters, etc.
Air Emissions				0.1	2	E4	Placeholder estimate by Barr
Wastewater Treatment							
Input					33	E4	Sum of discharges to water; assumes that most Hg is in washwater sent to a WWTP, not discharged directly to ground or surface waters
Output							
Sludge					31		See General Datal.xls, Distribution Factors
Effluent					2		See General Datal.xls, Distribution Factors
Sludge Disposal					31		See General Data.xls, Distribution Factor and Emission Factor sheets

* See QA Worksheet

References for Mercury Flow Diagram
THERMOMETERS

#	Reference	Review Notes
1	US EPA Municipal and Industrial Solid Waste Division, Office of Solid Wastes. Characterization of Products Containing Mercury in Municipal Solid Waste in the United States, 1970 to 2000. March 1992.	
2	Wisconsin DNR. DRAFT Wisconsin Mercury Sourcebook. May 1997.	
3	Oak Ridge National Laboratories. May 2001 Field Investigation, Fugitive Mercury Emissions from Noncombustion Sources in the Great Lakes Region (FuME). (Preliminary report of results)	
4	Blais, Lori, WLSSD. Email communication with Carol Andrews, Barr Engineering, June 28, 2001.	
		New law passed in Minnesota (June 2001): After January 1, 2002, the sale or predistribituion mercury thermometers is banned.

Support Data and Calculations for Mercury Flow Diagram
THERMOMETERS

Additional Supporting Data and Explanation of Calculations, Assumptions and Estimates for Thermometers

Production and Consumer Input

Ref. 1 The number of clinical thermometers produced and imported each year was obtained from US Dept. of Commerce records:

Ref. 1 Clinical thermometers are assumed to be 100% mercury in glass up to 1984 and 67% Hg, 33% digital from 1984 through 1990.
Hg thermometers are assumed to lose 2 percent of market share to digital thermometers each year after 1990.

Subset of data from Ref. 1, Table 2-7: DISCARDS OF MERCURY IN THERMOMETERS (in short tons)

Year Produced	Total Thermometers(1) (millions)	Mercury Thermometers(2) (millions)	Mercury in Thermometers(3) (short tons)	Hg discarded in Thermometers(4) (short tons)	Year Discarded(5)	
1965	16.9	16.9	12.9	12.2	1970	
1982	46.7	46.7	35.6	33.8	1987	(estimated discards peaked in 1987)
1984	33.8	22.5	17.2	16.3	1989	
1990	35 e	23.3	17.8	16.9	1995	
1995	38 e	23.2	17.7	16.8	2000	

(1) Production and imports from US Dept. of Commerce
(2) Assumed digital thermometers begin to take market share in 1984
(3) Assumes 9% of thermometers contain .61 grams, and 5% contain 2.25 grams = 0.7 g/thermometer
(4) Assumes 5% loss of mercury through breakage
(5) Assumes 5-year life for thermometers
e - Franklin Associates, Ltd. Estimate

Thermometers Purchases and Discards in MN Estimated based on above data based on MN = 2% of national economic activity
5% of mercury is lost due to breakage

Year	Thermometers Purchased (thermometers)	Mercury Thermometers (thermometers)	Mercury in Thermometers Kg	Basis
1985	676,000	450,000	312	From above data
1990	700,000	466,000	323	From above data
1995	760,000	464,000	321	From above data
2000	820,000	410,000	284	Assumes that 50% of sales are mercury thermometers.
2005	860,000	43,000	30	Assumes 5% of sales are mercury thermometers. A state ban on mercury thermometers will go into affect in 2002. Full compliance with the ban may take more than 5 years, therefore 5% sales is assume

Mercury Content

Ref. 1 The quantity of mercury per thermometer was determined by testing various brands and models.
The average weight of mercury in a standard oral/rectal/baby thermometer was 0.61 grams (sample of 2).
The average weight of mercury in a standard basal temperature thermometer was 2.25 grams (2 samples). These numbers are very approximate due to small sample size.
Authors assumed that 95% of clinical thermometers are oral/rectal/baby and 5% are basal temperature.

Releases from Consumers

Ref. 1 Authors assumed 5% breakage prior to disposal based on a 1990 survey of thermometer manufacturers.
Barr believes that 5% intuitively seems very low; there is little reason to discard an unbroken thermometer

Distribution of Thermometers to MSW, Infectious Waste or Mercury Recycling (via HHW)

Ref. 4 In 2000, WLSSD shipped 2447 fever thermometers to hazardous waste recycling
WLSSD's HHW collection is estimated by Barr, with input from MPCA (Ref. 5), to be: 0.1 of the statewide total

Year	# of fever thermometers collected by WLSSD	Estimated total number statewide	g Hg/thermometer	Kg of mercury in collected thermometers	Percent of discarded Hg
1990	200	2000	0.7	1	1.00%
2000	2447	24470	0.7	17	6%
2005	3200	32000	0.7	22	

B. Product Descriptions and Basis for Flow Diagrams

1. Fluorescent Lamps

a) Fluorescent Lamps - Product Description

Fluorescent light bulbs (lamps) and high intensity discharge (HID) lamps are energy-efficient lighting sources that use 75 percent less electricity than incandescent lights for a given amount of light.[9] Current technology requires the use of at least a small amount of mercury for fluorescent lamps to function properly. Eliminating mercury would lower lamp efficiency and shorten bulb life.[10] The amount of mercury contained in fluorescent lamps has declined significantly, from an average of 48.2 mg per four-foot bulb in 1985 to less than 5 mg in the Philips Alto lamp.[11] At this same time, the quantity of fluorescent lamps in use has increased.

Fluorescent lamps are used in residential, office, commercial and institutional applications. According to a report by USEPA, in 1989 fluorescent lamps were the second largest source of mercury in MSW, accounting for an estimated 26 tons of mercury in MSW nationwide. In 1989, compared to other types of bulbs, fluorescent lamps accounted for most of the mercury in lamps.[12] US EPA estimated that the average mercury content of fluorescent bulbs (considering all lamp sizes) was:

- 1970-1984: 75 mg per bulb
- 1985 to 1991: 55 mg per bulb

US EPA assumed that fluorescent lamps last four years on average.

b) Fluorescent Lamps - Inventory of Information

(1) Sources

The primary sources of information used in developing the flow diagrams were:

---

[9] MPCA. *Household Fluorescent Lights: a household hazardous waste fact sheet.* (undated).

[10] Howley, Joseph, GE Lighting. Letter to US EPA dated August 20, 1996.

[11] Walitsky, Paul, Philips. Email to Alexis Cain, EPA Region V, dated 10/4/00, 12:58 PM.

[12] US EPA Municipal and Industrial Solid Waste Division, Office of Solid Wastes. *Characterization of Products Containing Mercury in Municipal Solid Waste in the United States, 1970 to 2000.* March 1992.

- US EPA Municipal and Industrial Solid Waste Division, Office of Solid Wastes. *Characterization of Products Containing Mercury in Municipal Solid Waste in the United States, 1970 to 2000*. March 1992;
- Howley, Joseph, GE Lighting. Letter to US EPA dated August 20, 1996; and
- Lindberg, et al, ORNL, UCF and Florida DEP. ORNL Sampling Operations Summary and Preliminary Data Report for PaMSWaD-I, Brevard County Landfill. February 6, 1999.

Other references used are noted in this report's footnotes and listed as references with the flow diagrams.

(2) Data Gaps

Estimates are based on national data. No data specific to Minnesota was found.

In general, a reasonable amount of data exists to calculate inputs of mercury to lamps. However, data on releases from lamps during transit, processing and recycling is preliminary and ranges from loss estimates of less than one percent[13] to up to 80%.[14] Studies of releases of mercury from lamps during transit to landfills or at recycling facilities by staff from the MPCA and Oak Ridge National Laboratories (ORNL) have begun to collect data that will help to improve the accuracy of the emission factors for these points of release. [15] However, data has not been collected over a wide enough range of conditions (e.g., ambient temperatures) to provide an accurate calculation of emission factors.

Some assumptions were required to estimate the overall average mercury content of all types of fluorescent bulbs, especially for bulbs made in 2000 and 2005. Philips reports that its ALTO lamp contains less than 5 mg of mercury per bulb.[16] However, not all bulbs and manufacturers have achieved this low level. The industry's first priority has been to reduce mercury levels in four-foot lamps because that is the most commonly used fluorescent lamp.[17] Based on data found in the literature, Barr assumed an average mercury content for fluorescent lamps of 10 mg/lamp for the year 2000.

---

[13] Howley, Joseph, GE Lighting. Letter to US EPA dated August 20, 1996.

[14] Lindberg, et al, ORNL, UCF and fluorescent lamps DEP. ORNL Sampling Operations Summary and Preliminary Data Report for PaMSWaD-I, Brevard County Landfill. February 6, 1999.

[15] Ibid.

[16] Walitsky, Paul, Philips. Email to Alexis Cain, EPA Region V, dated 10/4/00, 12:58 PM.

[17] Howley, Joseph, GE Lighting. Letter to US EPA dated August 20, 1996.

c) Fluorescent Lamps – Flow Diagram and Model

The main pathways of concern for lamps are assumed to be breakage by consumer, management as MSW, and recycling. Although relatively good data is available regarding fluorescent lamps, a number of assumptions are still required to complete the flow diagrams. Key assumptions are described below.

Percent lost during waste storage, transport and transfer: Estimates of the percentage of mercury lost from broken lamps range from 5% to 80%, depending in part on the amount of time that broken lamps are exposed to air (e.g., in storage). In 1996, a lamp manufacturer estimated loss in transit to be less than 1%.[18] US EPA modeling for the Mercury Study Report to Congress predicted 6% loss from garbage trucks. EPA assumed that all of the mercury vapor is emitted to the atmosphere, but apparently did not assume that any mercury that is not already in vapor form is lost.[19] It is unclear whether EPA accounted for any loss from lamps broken by the user. Barr selected emission factors for losses to air from non-recycled lamps that fall within the range of the percent loss predicted by Aucott[20] and that predicted by Lindberg.[21] We used a mercury release rate that falls on the low end of the range, considering that EPA estimated a transit loss of only 6%. Also, the colder average ambient temperature in Minnesota (than in Florida where testing was conducted by Lindberg) would tend to reduce mercury emission rates from broken lamps. Specifically, the flow diagrams use an emission factor of 8% loss to air en route from lamp users to MSW disposal facilities for year 1990, 12% for 2000, and 13% for 2005. A lower loss rate (8%) was assumed for 1990 because less waste underwent additional handling at transfer stations, while a slightly higher rate (13%) was used for 2000 to account for a continued increase in the use of transfer stations. The emission factor selected has a relatively significant impact on results. A sensitivity analysis for year 2000 using an emission factors ranging from 5% to 25% yields a range in mercury releases to air from loss in transit to MSW of 12 to 61 kg/year.

For lamps en route to recycling, the emission rate of five percent is based on that used in the US EPA Mercury Report to Congress. EPA predicted this loss using the waste pile emission model

---

[18] Ibid.

[19] US EPA Mercury Study Report to Congress, Volume II. 1997. EPA-452/R-97-004.

[20] Aucott, Michael. New Jersey DEP. Email to Ed Swain, MPCA, dated December 1, 2000.

[21] Lindberg, et al, ORNL, UCF and fluorescent lamps DEP. ORNL Sampling Operations Summary and Preliminary Data Report for PaMSWaD-I, Brevard County Landfill. February 6, 1999.

developed for the RCRA air emission standards, assuming 30-day storage time and five percent breakage during transport and storage.

Estimated recycling rate for 2005: Barr assumed that the recycling rate would continue to increase between 2000 and 2005. Fluorescent lights and other high-intensity discharge (HID) lights are banned from disposal in MSW. This ban became effective August 1, 1994, applies to households as well as businesses, and includes: all shapes of fluorescent lights, compact fluorescent lights, mercury vapor lights, high pressure sodium lights, and metal halide lights. More extensive public education and enforcement of the ban should improve the recycling rate.

Adjustments to Emission Factors: The emission factors for burn barrels and compost were increased from 50% to 80% (0.5 to 0.8) for this product due to the ease by which mercury could be released from a broken product (relative to a more securely encased source of mercury).

d) Fluorescent Lamps - Interpretation

(1) Transferability to Other Governmental Units

Ambient air temperatures greatly affect the mercury vapor pressure and rate of volatilization. Therefore areas with average annual temperatures higher or lower than Minnesota may see greater or lower release rates from broken lamps. This could affect a number of the estimated emission factors shown in the flow diagrams.

(2) Impact on Minnesota's Mercury Inventory

In Jackson et al. MPCA staff predicted an emission rate to air of 20 pounds per year in 2000 from fluorescent lamp breakage. The flow diagrams predict an overall emission rate of 70 kg per year to air from fluorescent lamps in 2000, of which 9 kg (20 pounds) is from breakage prior to disposal. The remaining 61 kg is emitted from lamp recycling and waste storage, transfer, transit, processing and disposal activities. The estimate of releases from lamp breakage generated by this study is virtually identical to MPCA staff's estimate, even though it was arrived at independently (data from MPCA was not used as part of Barr's calculations). This similarity in results is likely due in part to the availability of relatively accurate data for fluorescent lamps although, as noted above, the selected transit emission factor significantly affects results.

2. Other Mercury-Containing Lamps

a) Other Mercury-Containing Lamps - Product Description

Certain high intensity discharge (HID) lamps that are typically used in street, industrial and office lighting contain mercury. These include mercury vapor, metal halide, and high-pressure sodium lamps. After fluorescent lamps, HID lamps are the most common types of mercury-containing lamp. Other lamps that use mercury include some automobile headlights (xenon-mercury-halide), 'CS – compact source mercury lamps' used in laboratories and for photographic uses, and 'special mercury lamps' used for their ultraviolet light properties, for example, as sun lamps[22]. The inner quartz tube of mercury and metal halide lamps contains from 20 mg in a 75-watt lamp to 250 mg in a 1000-watt lamp.[23] High-pressure sodium lamps contain from 8.3 mg in a 50-watt lamp to 25 mg in a 1000-watt lamp.[24] The lamp manufacturing industry is in the process of developing mercury-free HID lamps. Mercury-free high-pressure sodium lamps are available up to 150 watts, and mercury-free sodium lamps in higher wattages are under development. The availability of mercury-free halide lamps is still several years away. [25]

USEPA estimated that in 1989 the use of mercury in electric lighting lamps other than fluorescent lamps accounted for 1 ton of mercury in MSW discards out of 27 total tons from lamps.[26] In the same report, US EPA estimated that the average mercury content of HID lamps was:

- 1970-1984: 33 mg
- 1985 to 1991: 25 mg

US EPA reported in the Mercury Report to Congress that HID lamps last on average between 1 and 3 years. EPA projected that nationwide discards of mercury from lamps (all kinds) to be 25

---

[22] Gilkeson, John, MPCA. Mercury Products Study: A Report to the U.S. Environmental Protection Agency, Region V. April 16, 1996. Revised September 1999.

[23] US EPA Mercury Report to Congress. Page 3-4.

[24] Ibid.

[25] National Electrical Manufacturers Association (NEMA). "Alternatives to Mercury-containing Light Sources." April 2001.

[26] US EPA Municipal and Industrial Solid Waste Division, Office of Solid Wastes. *Characterization of Products Containing Mercury in Municipal Solid Waste in the United States, 1970 to 2000.* March 1992.

short tons in 1990, 33 tons in 1995, and 40 in 2000. This estimate assumes no mercury lamp recycling.[27]

b) Other Mercury-Containing Lamps - Inventory of Information

(1) Sources

US EPA Municipal and Industrial Solid Waste Division, Office of Solid Wastes. *Characterization of Products Containing Mercury in Municipal Solid Waste in the United States, 1970 to 2000.* March 1992.

EPA, *Mercury Study Report to Congress, Volume II: An inventory of Anthropogenic Mercury Emissions in the United States.* (December 1997)

c) Data Gaps

The data gaps for non-fluorescent lamps are similar to those for fluorescent lamps. In addition, because of the greater variety of lamps included in this category, and because efforts to estimate mercury releases from lamps have focused more on fluorescent lamps, it is more difficult to select an appropriate "average" mercury content for non-fluorescent lamps.

d) Other Mercury-Containing Lamps - Flow Diagram & Model

The framework used for the flow diagram for non-fluorescent lamps is basically identical to that used for fluorescent lamps, as it is assumed that the use and disposal pathways would be very similar. The key assumptions in developing distribution and emission factors that impact the amount of mercury releases predicted by the diagrams are also the same, especially the emission factors assigned to losses during storage, transfer and transit.

e) Other Mercury-Containing Lamps - Interpretation

(1) Transferability to Other Governmental Units

Ambient air temperatures greatly affect the mercury vapor pressure and rate of volatilization. Therefore areas with average annual temperatures higher or lower than Minnesota may see

---

[27] US EPA Municipal and Industrial Solid Waste Division, Office of Solid Wastes. *Characterization of Products Containing Mercury in Municipal Solid Waste in the United States, 1970 to 2000.* March 1992.

greater or lower release rates from broken lamps. This could affect a number of the estimated emission factors shown in the flow diagrams.

(2) Impact on Minnesota's Mercury Inventory

MPCA did not include breakage from "other" (non-fluorescent) lamps in their mercury emissions inventory in Jackson et al. However, because non-fluorescent lamps are not a large source of mercury releases relative to fluorescent lamps and other products, omitting "other" lamps does not constitute a major gap in the inventory.

3. Thermostats

a) Thermostats - Product Description

Mercury tilt switches have been used in thermostats for more than 40 years.[28] Thermostats containing mercury switches are still offered for sale as of 2001, although non-mercury alternatives such as electronic thermostats exist. Mercury-containing thermostats have been widely used in both homes and other building installations. The primary consumers of thermostats are heating, ventilating and air conditioning (HVAC) contractors.

It should be noted that mercury switches as a product group were also evaluated for this study. Because thermostats are a type of switch, releases from thermostats are a subset of the releases projected for all mercury switches.

b) Thermostats – Inventory of Information

(1) Sources

The main source of information for this product was the US EPA Municipal and Industrial Solid Waste Division, Office of Solid Wastes. *Characterization of Products Containing Mercury in Municipal Solid Waste in the United States, 1970 to 2000*. March 1992.

(2) Data Gaps

In *Characterization of Products Containing Mercury in Municipal Solid Waste in the United States, 1970 to 2000*, the authors estimated the number of thermostats purchased based on the

---

[28] Wisconsin DNR. DRAFT Wisconsin Mercury Sourcebook. May 1997. P. 611.

number of new housing units constructed nationally.[29] Barr used a similar approach based on the number of new housing units built in Minnesota in 1990 and 2000, and an estimated number for 2005 based on the trend in new housing starts between approximately 1995 and 2000. While this approach provides a sound method for estimating the number of thermostats purchased, it still requires a fair amount of estimating to account for the number of thermostats per unit and the number used in non-residential buildings. The percentage of thermostats installed that contain mercury (versus non-mercury alternatives) is also a rough estimate. Estimates could be greatly improved for year 2000 and 2005 by surveying HVAC contractors and/or sellers of thermostats.

Barr calculated annual discards of thermostats by assuming an average thermostat lifespan of 20 years. In some cases this is likely an underestimate, as mercury thermostats tend to last very long. In other cases, as energy efficiency grows in popularity, people may replace mercury thermostats before the end of their useful life with programmable non-mercury alternatives.

c) Thermostats – Flow Diagram & Model

In addition to including flow pathways for recycling, MSW disposal and wastewater, the flow diagram for thermostats also includes disposal as demolition debris as a potential route. Because thermostats are part of a building, not a personal possession, it is relatively likely that thermostats will end up in debris unless a demolition contractor intentionally recovers thermostats prior to demolition. Two of the key assumptions required for the thermostat flow diagrams are discussed below.

Distribution between MSW, demolition debris and recycling

The distribution of discarded thermostats between recycling and disposal as waste has been calculated for the year 2000 using data from the Thermostat Recycling Corporation (TRC) and the Western Lake Superior Sanitary District (WLSSD) Household Hazardous Waste (HHW) Collection Facility.[30] Although the TRC reports apparently provide accurate numbers of

---

[29] US EPA Municipal and Industrial Solid Waste Division, Office of Solid Wastes. *Characterization of Products Containing Mercury in Municipal Solid Waste in the United States, 1970 to 2000*. March 1992.

[30] Western Lake Superior Regional Household Hazardous Waste Program. Accumulating Annual Report for Mercury. 1998, 1999 and 2000.

thermostats collected from each state, the number of thermostats is still an estimate because the TRC collects thermostats primarily from businesses and HVAC contractors. Thermostats removed by homeowners that are properly managed (not discarded in waste) are likely sent directly to mercury recycling facilities via household hazardous waste collection facilities.[31] WLSSD data on the number of thermostats collected from homeowners was extrapolated to the rest of the state by assuming that the amount collected by WLSSD represents approximately ten percent of the quantity collected statewide. This is a rough estimate. It is difficult to discern whether the estimated number of thermostats collected by HHW programs should be added to the TRC data, or if the TRC data includes some thermostats collected through HHW programs.[32]

The percentage of thermostats not collected for recycling was divided between demolition debris and MSW. Because they are part of a building, not a personal belonging, thermostats are expected to have a higher-than-average likelihood of ending up in demolition waste rather than MSW.

Emissions related to thermostat recycling

The reduction in air emissions that can be attributed to operating a thermostat take-back and recycling program depend in large part on the emission factors assigned to releases from transit to recycling facilities and releases from recycling operations. Although nearly all distribution and emission factors contained in the diagram affect the estimated benefit of increasing the recycling rate, the emission factors assigned to each waste disposal practice are especially critical. Barr ran a sensitivity analysis using the Year 2000 thermostat flow diagram to assess the impact of varying the emission factors related to recycling (losses from transit and from recycling facilities). This was conducted for two scenarios: low-end and high-end estimates of emission factors for landfills (MSW and demolition debris), RDF processing and combustion, and MSW disposal via mass burn.

Results shown in Table IV-1 indicate the benefit of doubling the thermostat-recycling rate from 30 to 60 percent. This leads to a 30% decrease in air emissions if emissions associated with thermostat recycling are low, regardless of emission factors assigned to waste disposal. If the emission factors associated with thermostat recycling are high (5% loss to air), then the benefit

---

[31] Blais, Lori, WLSSD. Email communication with Carol Andrews, Barr Engineering, June 28, 2001.

[32] Volkman, Jennifer, MPCA. Email communication with Carol Andrews, Barr Engineering, June 27, 2001.

ranges from a 10% reduction in air emissions for the “high end” waste disposal emission factor scenario to zero reduction in air emissions if waste disposal mercury emissions are low. The amount of mercury “released” to land is reduced by approximately 40% if the recycling rate doubles in all cases. In summary, because emissions associated with waste disposal have become relatively low as incinerators must adhere to lower and lower mercury emission limits, recycling programs for thermostats and other products must themselves release very little mercury to result in significant reductions in releases to air.

Table IV-1: Sensitivity Analysis of Emission Factors for Waste Disposal and Recycling Relative to Thermostat Recycling Rates

	Waste Disposal EF: Low End				Waste Disposal EF: High End			
MSW & Demo Landfill EF	.01				.05			
RDF EF	.1				.22			
Mass Burn EF	.1				.14			
Thermostat Recycling EF	Low = .01		High = .05		Low = .01		High = .05	
Recycling Rate	30%	60%	30%	60%	30%	60%	30%	60%
	Releases predicted by flow diagram				Releases predicted by flow diagram			
Releases to air	13 kg	9	17	17	17	12	21	19
"Releases" to land	98 kg	57	98	57	94	55	94	55
Recovered mercury	42 kg	84	38	77	42	84	38	77

Key: EF = emission factor

d) Thermostats - Interpretation

(1) Transferability to Other Governmental Units

Using the flow diagrams for thermostats in another location would require replacing the estimated number of thermostats installed each year in Minnesota with estimates tailored to that region. Also, the recycling rates for thermostats would need to be adjusted. Data from the TRC is available for many states on the web site maintained by the National Electrical Manufacturers Association (NEMA).[33]

(2) Impact on Minnesota's Mercury Inventory

Flow diagrams for thermostats will be more useful for predicting the impacts of changes in thermostat disposal practices than improving the inventory accuracy. Because releases of mercury to air from thermostats come from landfills, waste combustors and other emission points that are included as a whole in MPCA staff's mercury emissions inventory, the inventory does not include an estimate for thermostats by themselves.

[33] NEMA. Thermostat Recycling Corporation Collections by State.

4. Relays and Switches

a) Relays and Switches - Product Description

Switches are used to open and close electrical circuits. They are activated by a change in temperature (temperature switch), pressure (pressure switch), or position/motion (tilt switch, float switch). Examples of industrial and household devices containing mercury switches include: furnaces, thermostats, washing machines, outboard motors, building security devices, film editing equipment, refrigerator/freezers, space heaters, clothes irons, sump pumps, bilge pumps, automobiles, electrical heaters and coolers, rectifiers, oscillators, and reactor vessels.

Relays are a specific use of a switch to convert output from control devices into production by opening or closing electrical contacts in a circuit. Mercury-wetted "reed" relays are used for reliable switching of wide ranges of signals and power levels because the load does not affect either contact life or performance as no solid metal-to-metal contact occurs. They are primarily used in test, calibration and measurement equipment where stable contact resistance over the life of the product is necessary. Wetted "reed" relays are used mostly for specialty equipment produced in relatively small quantities rather than for mass production applications. Displacement/plunger relays are generally used for high-current, high-voltage applications, resistance heating, welding, lighting, power supply switching, and industrial process controllers.

Switches tend to have long life spans. Ten percent of switches are discarded after 10 years, an additional 40% after 30 years, and the remaining 50% after 50 years.[34] According to the U.S. Bureau of Mines, 70 metric tons (70,000 kg) of mercury was used in the production of wiring devices and switches in the U.S. in 1990, less than one metric ton of which was lost to the environment.[35] We found no comprehensive 1990 data regarding imports of mercury-containing wiring devices and switches. In addition, 1,500 metric tons (1,500,000 kg) of mercury was stored in wiring device- and switch-manufacturing plants and in "installed" wiring devices and switches. Of that amount, 36 metric tons (36,000 kg) was removed from service and recycled and 62 metric tons (62,000 kg) was incinerated or disposed of in a landfill.[36]

---

[34] Jasinski, S.M., *The Materials Flow of Mercury in the United States*, (1994)

[35] Ibid.

[36] Sznopek, J.L. and Goonan, T.G., *The Materials Flow of Mercury in the Economies of the United States and the World*, (1999)

There are many non-mercury alternatives available for switches and relays, although mercury-containing switches are still used in "critical" applications and where a high degree of accuracy is needed.

b) Switches and Relays – Inventory of Information

No Minnesota-specific data was found regarding mercury switches and relays. The primary data sources used for switches and relays were:

- Jasinski, S.M., *The Materials Flow of Mercury in the United States*, (1994)
- Sznopek, J.L. and Goonan, T.G., *The Materials Flow of Mercury in the Economies of the United States and the World*, (1999)

c) Switches and Relays – Flow Diagram and Model

Based on the data noted above, the flow diagrams use approximately two percent of the national estimates for the United States as the input of mercury in these products that one could expect to find in Minnesota.

d) Switches and Relays – Interpretation

(1) Transferability

Because input to the flow diagrams for switches and relays are based on national data, the flow diagrams could easily be transferred to other states, provided the emission and distribution factors are appropriate adjusted.

(2) Impact on Minnesota's Emission Inventory

Because national data indicate that a very large amount of mercury has been used in switches and relays, and these products have long life spans, the flow diagrams predict releases associated with switches and relays of over 100 kg per year to air and over 500 kg per year to land, even in 2005. However, because of the many assumptions that had to be made to create the flow diagram, including rough estimates of releases from product breakage and releases during waste transit, the predicted release rates are very rough estimates.

5. Automobile Switches

a) Automobile Switches—Product Description

Mercury is used in tilt light switches for convenience lighting under hoods and trunks of automobiles and light trucks. The switches contribute to mercury emissions when end-of-life vehicles (ELVs) are recycled. The ELVs are crushed, shredded, and recycled in electric arc furnaces (EAFs). Thus the focus on mercury switches in automobiles stems from a concern about the mercury releases from EAFs. By 1995, hood/trunk switches were identified as the major use of mercury (87%) in automobiles, with 14 million switches supplied annually to the U.S. automotive industry.[37] The most cited report for number of mercury switches per end-of-life vehicle is the MPCA's 1995 Automobile Shredder Residue (ASR) report.[38] The ASR report counted the hood/trunk lighting in 605 ELVs and weighed the mercury in 12 switches. The results were 0.43 switches per vehicle and 0.8 grams to 1.0 grams per switch. The recent *Toxics in Vehicles: Mercury* (TVM) report preferred to use an estimate of 1.06 mercury switches per vehicle, which is based on 14 million mercury switches per year divided by 1996 U.S. production of 13,236,000 cars and light trucks.[39] TVM cites the Society of Automotive Engineers (SAE) white paper for an average mercury content of 0.7 grams to 1.5 grams, with an average of 0.8 grams per switch. Thus the two sources result in different estimates of mercury per vehicle: 0.34 – 0.43 grams per vehicle from the 1995 ASR report and 0.85 grams per vehicle from the 2001 TVM report.

The TVM report discounts the ASR findings because (1) only convenience lighting was examined (TVM estimate is assumed to include ABS switches and ride-control switches), (2) data were not collected on American versus "international cars" (mercury switches are found almost exclusively on American models), and (3) ASR report did not document quality control measures to ensure the auto salvage yards found all convenience lighting switches or kept accurate and complete records.[40] On the other hand, the TVM estimate does not appear entirely accurate because (1) it uses an approximation of the number of switches "provided annually to the U.S.

---

[37] Nachtman, J. and D. Hill. "Mercury in Automotive Systems-A White Paper" International Congress & Exposition, paper #960409, SAE. Detroit, MI. February 26-29, 1996;cited in *Toxics in Vehicles: Mercury*, January 2001.

[38] MPCA. Automobile Shredder Residue Report. June 1995.

[39] Griffith et al. Toxics in Vehicles: Mercury Implications for Recycling and Disposal. January 2001: p 15.

[40] Ibid. p.16.

automotive industry" and does not document the accuracy of this estimate either for 1996 or its application to other years, (2) although it is an accurate estimate of the number of switches in cars in the mid-1990's, many of the disposed cars that are used for scrap steel are at least 10 years old and this estimate may not represent the older models.

For this study, the ASR value appears to provide an accurate estimate for the 1990 evaluation and the TVM may provide an upper estimate of the mercury in U.S. cars for scrap recycling in 2000. However, the higher mercury per vehicle estimate in 2000 is offset by the greater removal and recycling of mercury switches before they shredded than was most likely the case in 1990. If we assume that no switches were recycled in 1990 and at least 50 percent were recycled in 2000, the two estimates are equivalent.

Regardless of the accuracy of these estimates, international automakers discontinued mercury use when Sweden's distribution and sales ban took effect in 1993. Although the use of mercury switches has been sharply reduced in the last few years, the average lifespan of a vehicle is 10-11 years; therefore, there will be a delayed response seen at the point of scrap steel recycling.

Antilock Brake Systems (ABS)

The use of mercury lighting has fallen 70% since 1995, although the use of mercury switches in ABS has increased to now represent 47% of the automotive use of mercury switches.[41] Ford has continued to used mercury switches for convenience lighting and ABS. General Motors has used mercury switches for convenience lighting and not ABS. DaimlerChrysler discontinued mercury switches for convenience lighting in 1993, but continues to use mercury switches in ABS.

b) Automobile Switches—Inventory of Information

(1) Sources

The ASR report was a primary source for the mercury flows in this product line. The TVM report was a valuable secondary source that compiled useful information from many primary sources, including the mercury mass balance for North Star Steel – Minnesota. *The Mercury*

---

[41] Menke, D.M. *Toxic by Design: The Automotive Industry's Continued Use of Mercury*. January 2001. http://www.cleancarcampaign.org/pdfs/toxicsinvehicles_mercury.pdf

Study Report to Congress[42] and the Binational Toxics Strategy web site[43] have provided extensive resources for mercury, but did not provide new information on mercury in switches.
A mercury mass balance by North Star Steel (the only EAF in Minnesota) indicated the mercury from shredded automobiles only accounted for about one-third of the mercury entering the EAF. Also, the shredded cars at North Star Steel (NSS) include cars received from other states and Canada. When these other sources of mercury are considered, the emissions estimate from this study does not conflict with the emissions estimate in the Minnesota mercury emissions inventory. The mercury emissions appear to represent about 26% of the total mercury emissions from smelting of scrap steel.

(2) Data Gaps

The focus of the source materials was on the mercury releases from metal shredders and EAFs, with the assumption that most of the mercury was coming from automobile switches. There is a need to identify the other sources of mercury to the EAFs. The mercury mass balance at NSS demonstrated that most of the mercury is in the fluff, which is generally landfilled as a hazardous waste. The MPCA's ASR study showed that there are relatively significant concentrations of incidental mercury in auto parts that are found in the shredder residue (e.g. headliner and door panels) and the ASR study noted that the proportion of a shredded car that is residue is expected to increase with the increase in the use of plastics and other composites. There remains insufficient information on the use of mercury switches in new models. The auto manufacturers have committed to phasing out mercury switches, but it is not clear what will happen with HID headlamps and ABS switches in four-wheel-drive vehicles. More data should be collected on these increased uses of mercury and on whether they can be readily recycled at scrap yards. More data is needed on the rate of mercury switch recycling. The ASR report is over five years old and mercury switch recycling has now become law. Can we assume the percent removed now is close to 100% or to 50%?

At least three component parts manufacturers in U.S. supply mercury switches to the automotive industry: Durakool, Inc. and Mercury Switches, Inc., in Elkhart, Indiana, and Comus International, in Nutley, N.J.[44] These manufacturers were not contacted; however, a follow-up to

---

[42] http://www.epa.gov/oar/mercury.html

[43] http://www.epa.gov/Region5/air/mercury/mercury.html

[44] Menke, D.M. *Toxic by Design: The Automotive Industry's Continued Use of Mercury*. January 2001.

this report should contact these manufacturers about estimating the future use of mercury switches.

This flow analysis did not include mercury releases from the switch recycling process. As a follow up to this study, a mercury flow analysis for switch recycling should be included with a larger evaluation of all mercury recycling.

c) Automobile Switches—Flow Diagram & Model

The mercury flow diagram for automobile switches is unique among the diagrams because the waste goes to a shredder and electric arc furnace for scrap metal recycling. The only differences among the three years—1990, 2000, and 2005—are the number of automobiles registered in the Minnesota and the proportion of recycled mercury switches. Car registrations and state population estimates for 1990 and 1999 were the basis for the estimates in 1990, 2000, and 2005. More details about the estimates and calculations are described in the footnotes to the flow diagrams and in the support data and product references.

The mercury flow analysis for automotive mercury switches indicates that regardless of the total mass of mercury, approximately 70 percent of the mercury goes to landfills in the automobile shredder residue and approximately 30 percent is emitted to the atmosphere. The amount of mercury lost to air emissions from land or discharged to water appears to be negligible. For 1990 and 2000, respectively, consumers disposed of an estimated 63 kg to 70 kg of mercury in discarded automobiles, and 94% went to scrap yards for recycling. What happens to the remaining 6% is not clear, but apparently includes individual storage or dismantling of the vehicles. The scrap yards are assumed to be in a steady state (annual inputs = annual outputs).

The estimated amount of mercury entering the Minnesota environment from mercury switches depends on the number of switches that are recycled before they enter a shredder. For the 1990 flow analysis, we assumed that none of the switches were recycled and all of the mercury (60 kg Hg) was released to the environment through metal scrap recycling (i.e., shredder and EAF). For the 2000 flow analysis, 75 percent of the switches are assumed recycled before entering a shredder, resulting in 17 kg Hg released to the environment and 49 kg Hg recycled from switches. For the 2005 flow analysis, the number of mercury switches was assumed to remain the same as in 2000. There was only an estimated one-kilogram increase in discarded

mercury from 2000 to 2005, but the final releases were the same within the rounding error of this analysis.

d) Automobile Switches—Interpretation

(1) Transferability to Other Governmental Units

The transferability to other states will depend on the number of registered automobiles and the presence of automobile scrap-recycling facilities in the state. In addition, each state is expected to have a different mercury-switch recycling initiative and this will influence the final mercury releases from switches in automobiles.

(2) Impact on Minnesota's Mercury Inventory

The Minnesota mercury emissions inventory attributed approximately 75 kg Hg per year to smelting of scrap steel in 1990 and assumed that would drop 50% by 2000 (38 kg Hg). Those best estimates are only somewhat higher than the total estimated releases in this flow analysis, but considerably higher for only air emissions. This flow analysis attributes a much higher fraction of the mercury going to landfill and not being released to the atmosphere.

The estimated releases to the environment in 2005 may be overestimated given the efforts by environmental groups, scrap yards, and state agencies to convince U.S. automakers to discontinue using mercury switches. There has been a large reduction in use of mercury switches from 1995 to 2000 and the U.S. automotive industry has committed to complete elimination of mercury switches for convenience lighting by 2002. This reduction, coupled with increased recycling, indicates that mercury releases from this product line will continue to decline.

6. Fever Thermometers

a) Fever Thermometers - Product Description

The ability of mercury to readily expand and contract in liquid form has led to its use in thermometers for many years. Mercury thermometers typically contain mercury in a hollow tube of glass. In addition to fever thermometers, mercury has also been used in many other types of thermometers in home, commercial, and industrial settings. These include laboratory and weather thermometers, sling psychrometers and mason's hygrometers (for measuring relative

humidity), oven and other thermometers used for cooking applications, and many others.[45] However, the analysis for this study has focused on fever thermometers.

b) Fever Thermometers - Inventory of Information

(1) Sources

The main source of information for this product was the US EPA Municipal and Industrial Solid Waste Division, Office of Solid Wastes. *Characterization of Products Containing Mercury in Municipal Solid Waste in the United States, 1970 to 2000.* March 1992.

(2) Data Gaps

Estimates of thermometer sales in Minnesota are based on nation-wide estimates. No Minnesota-specific data was found. The percentage of the thermometer market occupied by mercury thermometers in 2000 is also a rough estimate that has not been verified using recent data. The estimate that future sales of mercury thermometers will approach zero after Minnesota's legislative ban on sales of mercury thermometer becomes effective in 2002 is also a rough estimate. The actual rate of sales after 2002 will depend on the degree of education and enforcement used to implement the ban.

c) Fever Thermometers - Flow Diagram & Model

The flow diagram accounts only for fever thermometers which account for the vast majority of mercury-containing thermometers by quantity, although other thermometers tend to contain more mercury per thermometer.

Because fever thermometers are often used in clinical settings, disposal as infectious waste is included as a potential pathway for thermometers, along with breakage, MSW disposal, recycling, and wastewater. The most critical assumptions used in the diagram are discussed below.

Breakage by consumers: In *Characterization of Products Containing Mercury in Municipal Solid Waste in the United States, 1970 to 2000*, the authors assumed a breakage rate of 5% based on a 1990 telephone survey of US thermometer manufacturers. Barr assumed that a much higher percentage—50 percent—of thermometers are broken by consumers, based on the fact that there

---

[45] Gilkeson, J. Mercury Products Study: A report to the U.S. Environmental Protection Agency – Region V, (April, 1996)

is little reason to discard a thermometer if it is not broken. This becomes less true as more people participate in mercury thermometer-exchange programs; however, thermometers collected by such programs would go to mercury recycling facilities, not MSW.

Of the 50% of thermometers broken, Barr assumes that 20 percent of the mercury ends up in wastewater when people clean up the spill by washing the area, and ten percent is lost to air through volatilization. The remaining mercury is distributed between MSW, infectious waste and recycling using the same distribution factors assigned to unbroken thermometers. These percentages are rough estimates by Barr. Additional information collected through surveys and testing mercury vaporization rates from spills is needed to improve the accuracy of these estimates.

Distribution between MSW, infectious waste and recycling: The number of fever thermometers recycled was estimated for year 2000 based on the number collected by the WLSSD HHW program, extrapolated to the rest of the state assuming that WLSSD collects 10% of the amount collected statewide. The accuracy of this estimate could be improved by requesting data from all HHW programs statewide.

d) Fever Thermometers - Interpretation

(1) Transferability

Although the flow diagram itself is transferable, many of the assumptions and inputs are specific to Minnesota. For example, mercury thermometer collection programs may be less prevalent in some other states.

(2) Relative importance to the Minnesota Mercury Emissions Inventory

The flow diagrams predict that fever thermometers have the potential to be a relatively significant source of mercury releases to air because of the high likelihood that they will be broken. Because releases of mercury to air from thermometers come from landfills, waste combustors and other emission points that are included as a whole in MPCA staff's mercury emissions inventory, the inventory does not include an estimate for thermometers by themselves.

7. Measurement and Control Devices

a) Measurement and Control Devices - Product Description

This product category primarily includes manometers, barometers, thermostats and thermometers. More detailed discussions of thermostats and thermometers are provided above. Manometers and barometers are pressure measurement devices which measure hydrostatic pressure and atmospheric pressure respectively.

Examples of industrial and household measurement and control devices containing mercury include automatic dairy milking systems, sphygmomanometers, gas meter pressure-safety devices, air-flow measurement devices, diffusion pumps, carburetor-adjusting devices, steam flow meters, sling psychrometers, mason's hygrometers, and flame sensors. According to the U.S. Bureau of Mines, 108 metric tons (108,000 kg) of mercury was used in the production of measuring and control devices in the U.S. in 1990, one metric ton of which was lost to the environment.[46] We found no comprehensive data regarding imports of measurement and control devices. In addition, 1,000 metric tons (1,000,000 kg) of mercury was stored in measurement and control device manufacturing plants and in "installed" measurement and control devices. Of that amount, 60 metric tons (60,000 kg) was removed from service and recycled and 47 metric tons was incinerated or disposed in a landfill.[47]

b) Measurement and Control Devices - Inventory of Information

The following sources provided most of the information for this product:

1. EPA, *Mercury Study Report to Congress, Volume II: An inventory of Anthropogenic Mercury Emissions in the United States* (December 1997)
2. Gilkeson, John, *Mercury Products Study: A report to the U.S. Environmental Protection Agency – Region V*, (April, 1996)
3. Sznopek, J.L. and Goonan, T.G., *The Materials Flow of Mercury in the Economies of the United States and the World*, (1999)
4. Jasinski, S. M., *The Materials Flow of Mercury in the United States.* (1994)

---

[46] Jasinski, S.M., *The Materials Flow of Mercury in the United States*, (1994)

[47] Sznopek, J.L. and Goonan, T.G., *The Materials Flow of Mercury in the Economies of the United States and the World*, (1999)

c) Measurement and Control Devices - Flow Diagram & Model

The flow diagram for measurement and control devices includes recycling, disposal as MSW, and wastewater as potential pathways for mercury contained in such products. Other pathways that also could apply but were not included to simplify the diagram are infectious waste and demolition debris. A number of medical devices such as sphygmomanometers (blood-pressure cuffs) can contain mercury. Devices such as gas meter pressure-safety devices, manometers and air-flow measurement devices are examples of products that, if not properly removed prior to building demolition, could be found in demolition waste. The impact of this simplification on results is likely an overestimate of mercury inputs to MSW and a potentially significant underestimate of overall inputs of mercury to infectious waste and demolition debris.

d) Measurement and Control Devices - Interpretation

(1) Transferability to Other Governmental Units

Because input to the flow diagrams for measurement and control devices are based on national data, the flow diagrams could easily be transferred to other states in the US, provided the emission and distribution factors are appropriate adjusted.

(2) Relative importance to the Minnesota Mercury Emissions Inventory

As indicated in the flow diagrams and summary table, Table ES-1, measurement and control devices constitute a relatively large source of mercury, especially to land. The diagrams predict that such devices will be one of the remaining significant sources of mercury to air in 2005. Because releases of mercury to air from such devices come from landfills, waste combustors and other emission points that are included as a whole in MPCA staff's mercury emissions inventory, the inventory does not include an estimate for measurement and control by themselves, although releases from "general laboratory use" would likely include some direct releases due to breakage and spills from this product category in particular.

8. Batteries

a) Batteries - Product Description

This section addresses household batteries including alkaline manganese, silver oxide, carbon zinc, and zinc air batteries in the form of cylinders (D, C, AA, AAA, etc.) and "button cells." Prior to 1993 mercury was added to household batteries to control "gassing" and reduce the risk of battery casing leakage or explosion. The battery manufacturing industry discontinued adding

mercury to household batteries (except for specific "button cell" battery applications) between 1992-1993.[48] In addition, Title II of the Federal Mercury Containing Battery Act was put into effect in May, 1996. The act prohibits the sale of "mercury-containing batteries" in the U.S. The combination of legislation and changes in battery production has greatly decreased the amount of mercury in municipal solid waste due to discarded batteries. An annual study conducted by the National Electrical Manufacturers Association (NEMA) has found that mercury content in discarded batteries has dropped by over 90% in the last decade. The drop is attributable to the changes in manufacturing practice and the relatively high turnover rate of household batteries. A majority of household batteries (approximately 73%) are discarded between 2-5 years after purchase. The level of mercury in municipal solid waste streams from household batteries is expected to continue to decline and is estimated to be "mercury free" by 2008.[49]

Some "button cell" batteries still contain typically 33%-50% mercury by weight. They are often used in transistorized equipment such as radios, hearing aids, and watches. Acceptable "no mercury added" alternatives are available for almost all applications of household batteries. NEMA reports that battery manufacturers are conducting research and development on new technologies to produce "mercury free" alternatives to mercuric-oxide-containing batteries where alternatives are currently unavailable (e.g. hearing aids and hospital applications).
U.S. battery manufacturers reported using approximately 106 tons of mercury in 1990, 6.6 tons in 1994, and 0.5 tons in 2000, a significant drop.[50] But while the amount of mercury used in U.S. battery production has gone down, the amount of mercury imported into the U.S. in batteries has gone up. For example, the total volume of mercury contained in batteries sold in the U.S. was approximately 2 tons in 2000.[51] Assuming that most batteries produced in the U.S. are sold in the U.S., 75% of the mercury contained in household batteries was imported for the year 2000.

---

[48] National Electrical Manufacturers Association (NEMA), Summary Report of Analyses of Mercury from Consumer Batteries in the Waste Stream (April, 2001).

[49] National Electrical Manufacturers Association (NEMA), Summary Report of Analyses of Mercury from Consumer Batteries in the Waste Stream (April, 2001). "Mercury free" means containing less than the naturally occurring background level of mercury as measured in parts per million (< 5 ppm).

[50] Jasinski, S.M., The Materials Flow of Mercury in the United States (1994). Personal conversations with Ric Erdheim of NEMA.

[51] Personal conversations with Ric Erdheim of NEMA.

b) Batteries - Inventory of Information

(1) Sources

The following sources provided the majority of information for this product:

1. National Electrical Manufacturers Association (NEMA), *Summary Report of Analyses of Mercury from Consumer Batteries in the Waste Stream Fall 2000*. (April 2001)
2. EPA, *Mercury Study Report to Congress, Volume II: An inventory of Anthropogenic Mercury Emissions in the United States* (December 1997)
3. Gilkeson, John, *Mercury Products Study: A report to the U.S. Environmental Protection Agency – Region V*, (April, 1996)
4. Erdheim, Eric, phone conversations, May-June, 2001
5. Jasinski, S. M., *The Materials Flow of Mercury in the United States.* (1994)

(2) Data Gaps

The estimate of mercury releases from batteries for 1990 is estimated to be within 10 %. The weight of mercury consumed by the U.S. battery manufacturing industry was used as a best estimate of the amount of mercury contained in discarded household batteries. We assumed any losses during manufacturing were made up by battery imports. Battery imports were estimated to be less than 10% in 1990 according to NEMA. More accurate data on the number and types of batteries sold in the U.S., or import and export volumes would help to improve the accuracy of the estimate. However, given that batteries no longer contribute a significant amount to mercury releases (less than 33 kg) and that the battery industry continues developing low- and no-mercury batteries, Barr does not recommend further research on household batteries. Further research into specific uses of mercury containing batteries such as hearing aids and hospital equipment may provide some benefit in reducing mercury releases.

c) Batteries - Flow Diagram & Model

The flow diagram focuses on releases via municipal solid waste. Barr assumes that a negligible amount of batteries containing mercury end up in infectious waste or construction and demolition waste.

The mercury flow analysis for mercury containing batteries indicates that the majority of mercury is deposited in landfills (88%) and approximately 12% is released to the atmosphere. The main route of release to the atmosphere is via incineration through RDF facilities (1.2 kg), MSW mass burn facilities (0.7 kg), and burn barrels (0.9 kg).

d) Batteries - Interpretation

(1) Transferability to Other Governmental Units

The results of this analysis are readily transferable to other governmental units given that battery use patterns are relatively similar throughout the U.S. Because most of the mercury released due to discarded batteries is ultimately contained in landfills, the location and functionality of the landfills must also be considered.

(2) Relative importance to the Minnesota Mercury Emissions Inventory

Unlike some of the other products considered that have unique emission factors related only to that product, such as releases directly to air from paint or dental amalgam placement/removal, mercury releases from batteries are assumed to be completely accounted for by emission points such as solid waste combustors that are already accounted for in the emission inventory. Therefore there is no emission estimate for batteries in the mercury inventories generated by MPCA staff with which the results of this study can be compared. The results, however, do provide a useful indication of the relative contribution that mercury in batteries makes to the applicable emission points and the inventory as a whole.

9. Pharmaceuticals and Fungicides

a) Pharmaceuticals and Fungicides—Product Description

This disparate product group includes mercury used in pharmaceuticals, primarily as a preservative, and in fungicides, primarily for treatment of molds on golf course turf. This group does not include fungicide use in paint or in agricultural uses(e.g. seed treatment). As an additive to latex paint, see the Section I. The pharmaceuticals and fungicides share two attributes: (1) use of mercury as a biocide and (2) dramatic reduction or elimination since 1995. Mercury fungicides have not been used for agricultural use since 1981[52] and therefore did not contribute to the inventory for 1990 or later years. US EPA confirmed in May 1995 that all US registrations for mercury-containing pesticides have been canceled.[53] The last four uses of mercury in pesticides were turf fungicide, mildewcide for fresh cut wood, latex paint fungicide/preservative,

---

[52] Jasinski 1994

[53] Gilkeson, J. Mercury Products Study. April 16, 1996; Revised August 1998; Revised September 1999, MPCA

and outdoor fabric treatment.[54] Registrations for calo-chlor and calo-gran (for snow mold control) were voluntarily canceled by the manufacturer in November 1993, but existing stocks could be sold until depleted. These were the last mercury-based pesticides.[55]

The most common medical use of mercury has been the preservative, thimerosal. It continues to be used in a number of vaccines. Other preservatives include phenylmercuric acetate, phenylmercuric nitrate, and others. They have commonly been used in nasal sprays and contact lens solution.[56]

b) Pharmaceuticals and Fungicides—Inventory of Information

(1) Pharmaceutical Sources

The MPCA's Mercury Products Report[57] was a good source of general information on the use of mercury in fungicides and pharmaceuticals and gave a detailed listing of the specific uses of mercury in these products.

Peak use of mercury in pharmaceuticals was in the 1940s, and except for 1962 and 1963, its use declined to the last reported national use of 2 metric tons in 1976.[58] Since 1976, the USGS has reported that the information was withheld to avoid disclosing company proprietary data. On November 19, 1999, the Food and Drug Administration announced the availability of a document entitled "Mercury Compounds in Drugs and Food."[59] The report included an estimate of the amount of intentionally introduced mercury used in pharmaceuticals. The estimate included human and veterinary drug products. The annual estimate of mercury added as either an active and inactive ingredient was 75 to 80 kg for the United States. This national estimate was applied to Minnesota, assuming Minnesota represented 2% of the national consumption of the drug products.

(2) Fungicide Sources

---

[54] Gilkeson 1996 p 12

[55] Binational Toxics Strategy 1999: Under discussion of FIFRA statute

[56] Gilkeson 1996 p 3

[57] Ibid.

[58] Jasinski 1994.

[59] Federal Register: Volume 64, Number 223, Page 633

The Minnesota Mercury Air Emissions Inventory lists "Volatilization from Dissipative Use" and "Fungicide Volatilization" as separate line items.[60] The former category includes ritual uses and pharmaceuticals, but excludes fungicides. The latter is an estimate for fungicide use on golf courses. The estimates for these two categories are as follows:

Table IV-2. Estimate of mercury emissions from fungicide and dissipative use volatilization – Minnesota Mercury Emissions Inventory[61] (kilograms)

Volatilization Source	Year	Best	Min	Max
Fungicide	1990	39	20	78
	1995	11	6	23
	2000	2	1	5
	2005	2	1	5
Dissipative Use	All years	1	0.5	2

The most complete evaluation of turf fungicides was reported for the Province of Ontario.[62] They assumed 50% of the mercury in turf fungicides were released to the atmosphere directly and the remaining 50% was released to land. Of the one-half that was released to land, they assumed 10% was washed into waterways from runoff. Given the lack of any additional information on mercury fungicides, the Ontario approach to estimating mercury release from fungicides was used in this study. The estimated number of golf courses in Minnesota is 480 courses, and about 300 are 18 hole courses.[63]

c) Pharmaceuticals and Fungicides—Flow Diagram & Model

Separate mercury flow diagrams were developed for pharmaceuticals and fungicides because of their differences in pathways. A mercury flow analysis for turf fungicides was completed for only 1990, because by 1995 mercury was no longer added to fungicides. A mercury flow analysis for pharmaceuticals was completed for only 2000 because of the availability of recent information on mercury in drugs. Given the relatively small quantity of mercury in drugs in

---

[60] Jackson et al. 2000, Table 1.

[61] Ibid.

[62] Benazon Environmental Inc. 1998.

[63] Scott Turtinen, Minnesota Golf Course Superintendents Association, electronic mail and telephone communication with Christy Henrikson, Barr Engineering.

2000, we assumed the quantity for 1990 was in the same order of magnitude and in 2005 would be less than in 2000.

Mercury in pharmaceuticals followed the general pathways for consumer products to municipal solid waste and wastewater. The FDA's estimate of 70-80 kg Hg per year for the entire U.S. translates to only 1.5 kg Hg estimated for use by Minnesota consumers. Total mercury release from pharmaceuticals use in Minnesota for 2000 was an estimated 0.35 kg. Reporting the estimate to two decimal places overstates the accuracy of this estimate, but was necessary to indicate flows. This is an exception to other products that were reported to the nearest kilogram. The 1990 mercury flow analysis for turf fungicides results in an estimated 675 kg Hg released to the atmosphere, 133 kg Hg to surface water, and 512 kg Hg to golf course soils. Prior to 1980, turf fungicides were probably a larger source of mercury to surface and ground water near golf courses.

d) Pharmaceuticals and Fungicides—Interpretation

(1) Relative importance to the Minnesota Mercury Emissions Inventory

The relative importance of mercury release to the environment from pharmaceuticals could have potentially been significant at one time because most of the mercury was probably directly washed off into wastewater. The 1999 analysis by the FDA indicates that the amount of mercury in pharmaceuticals is relatively insignificant compared to other sources.

The flow analysis estimate of mercury release from turf fungicides is notably larger than the comparable 1990 estimate in the current Minnesota mercury emissions inventory (39 kg Hg). The MPCA will need to evaluate the merits of the different approaches to estimating mercury releases from fungicides. Clearly the assumptions in the mercury flow analysis have a high level of uncertainty and we will never know for certain how much mercury was applied to golf courses in the past. As with latex paint, discussed below, mercury release was potentially much higher in 1990 than was previously estimated, yet in both cases the present (2000) and future (2005) estimates are at or close to zero.

(2) Transferability to Other Governmental Units

The pharmaceutical and fungicide flow diagrams are directly transferable to other states with the appropriate changes in input estimates, such as population size and number of golf courses. Given the relatively small quantity of mercury in pharmaceuticals, it is not likely to be a flow

diagram of interest for transference to other governmental units. The fungicide model could, however, be useful to other governmental units to estimate historical releases of mercury.

10. Latex Paint

a) Latex Paint—Product Description

Four mercury compounds—phenylmercuric acetate, 3-(chloromethoxy) propyl mercuric acetate, di(phenyl mercury) dodecenylsuccinate, and phenylmercuric oleate—have been registered as biocides for interior and exterior paint[64]. Phenylmercuric acetate ("PMA") was the most common and widely used as a preservative during storage and as a fungicide following application.
As of May 1991, all registrations for mercury biocides used in paints were voluntarily canceled by the registrants.[65] US EPA banned the use of mercury in interior paint in 1990 and exterior paint in 1991. Under these laws, existing stocks of interior latex paint could continue to be sold until July 1991.

The latex paint product line is unique for several reasons. The use of mercury in the product was discontinued by 1991, and is therefore, primarily an issue for the 1990 baseline inventory. While mercury use for many product lines has been sharply reduced, it has been essentially eliminated in paint, pharmaceuticals, fungicides, and batteries. Some pharmaceutical uses (e.g. Thimerosal as a preservative) and batteries ("button" type) continue to be mercury-added products. Like fungicide, latex paint was an "area source," which makes it an emission source primarily at the point of use, rather than after it enters the waste stream.

b) Latex Paint—Inventory of Information

(1) Sources

The USGS Minerals Survey and materials flow reports provided the main source of data used in this study regarding the amount of mercury used for paints.[66] Ontario's mercury report[67] and the

---

[64] U.S. EPA Mercury Study Report to Congress. 1997. p3-8

[65] Agocs et al., 1990; cited in ibid.

[66] USGS reports on mercury at http://minerals.usgs.gov/minerals/pubs/commodity/mercury.html; especially used for paint was Jasinski, S.M. *The Materials Flow of Mercury in the United States*. Information Circular 9412. Table 4.

[67] Benazon Environmental, Inc. Historical Mercury Consumption and Release Estimates for the Province of Ontario. April 17, 1998. pp8-9.

draft report from New Jersey DEP were helpful in providing approaches to calculating mercury emissions from paints. The Mercury Study Report to Congress categorized paint use as an "area source," but concluded there was insufficient information to estimate 1994-1995 emissions.

Several approaches have been taken to estimate the amount of mercury emitted from latex paint. The US EPA reported that emissions could occur for as long as seven years after initial application of paint to a surface, although the distribution of emissions over this time period is unknown.[68] The US EPA cited a 1975 study estimated that 66% of the mercury used in paints was emitted into the atmosphere.[69] The Ontario and New Jersey reports, as well as the Minnesota Mercury Emissions Inventory, estimated mercury emissions based on the amount of mercury used in paint and the assumption that a fraction of the paint was emitted to the atmosphere or water. The Ontario study assumed 60% of the mercury from interior paint and 75% of the mercury from exterior paint volatilized to the atmosphere.[70] The published Minnesota Mercury Emission Inventory estimated the half-life of mercury on painted surfaces was approximately one year,[71] which is equivalent to 50% volatilization of mercury. NJDEP assumed a half-life of 1.5 years and first-order exponential degradation.

According to the US EPA Mercury Study Report to Congress, the paint industry's demand in 1989 was 211 tons, but fell to 7 tons in 1991 and was completely eliminated in 1992 (see Figure IV-3). If it is accepted that there is carryover of mercury in paint from one year to the next and the rate of volatilization remains constant, then the estimate of the mercury volatilized for a given year should include both the mercury used that year plus the mercury remaining from previous years. This seems particularly important for the 1990 baseline year because there was a dramatic decline in the use of mercury for paint in 1990 compared to previous years.

---

[68] USEPA *Mercury Study Report to Congress*, 1997, citing an earlier report: USEPA 1992a

[69] Van Horn 1975; cited in USEPA 1997

[70] Ibid. references Taylor and Tickle 1969; Taylor et al. 1969; Taylor and Hunter 1972.

[71] Minnesota Pollution Control Agency. Options and Strategies for Reducing Mercury Releases, Source Reduction Feasibility and Reduction Strategies Committee Report, MPCA, Policy and Planning Division. October 2, 1998. http://www.pca.state.mn.us/hot/legislature/reports/1999/mercury.pdf

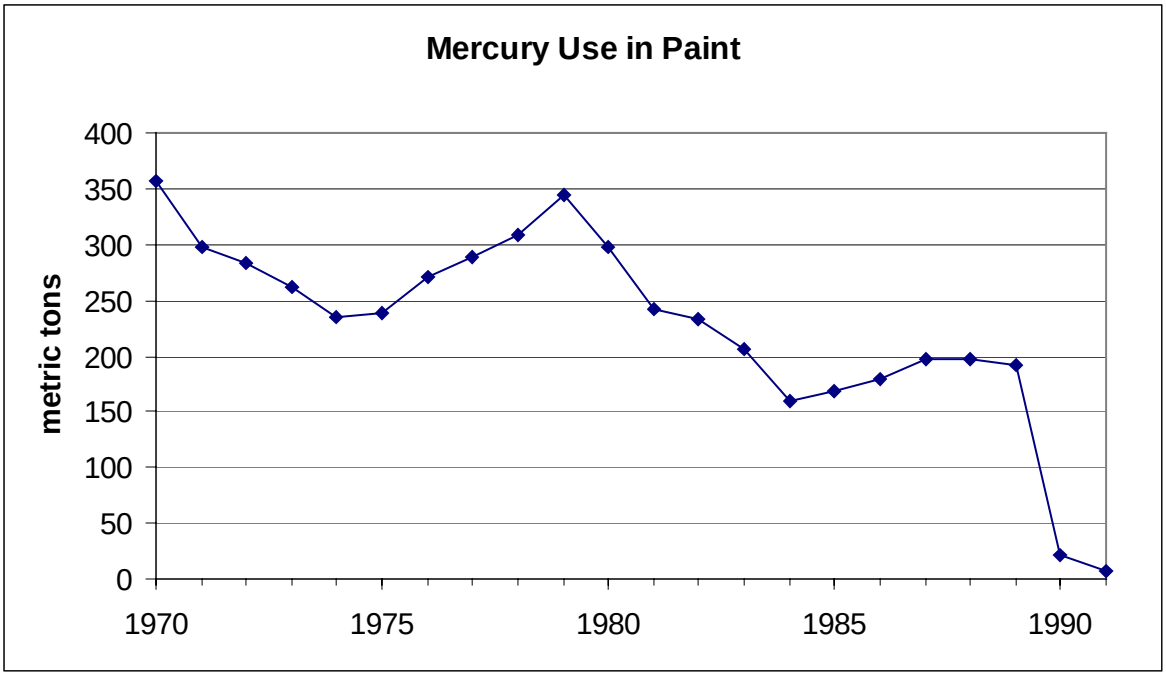

Figure IV-3. Mercury consumption by the paint sector.

Source: Jasinski, 1994. USGS

(2) Data Gaps

There remains a great deal of uncertainty about the actual mercury releases from paints; however, because mercury is no longer used in paints, there is little reason to collect additional data on mercury releases from paints. One large question that remains from the historical releases of mercury from paints is how much was actually volatilized versus washed off by precipitation. Mercury in antifouling paints was banned by the US EPA in 1972 because leach from the paint on the bottom of ships into the water. The early studies by Taylor et al.[72] indicate that most of the mercury in exterior paint could be washed off by rainfall.[73] This could have had very serious consequences for aquatic systems, given the fungicides were phenyl mercury compounds that

---

[72] Taylor, C.G. and W. Tickle. Radiometric Studies of Mercury Loss from Fungicidal Paints. I. Loss of Phenyl Mercuric Acetate. J. Appl. Chem. 19: 1-7

Taylor, C.G., W. Tickle, and A. Dwyer. Radiometric Studies of Mercury Loss- from Fungicidal Paints. II. Comparison of Three Phenyl Mercury Compounds. J. Appl. Chem. 19: 8-11

[73] Ibid. p4: "All films [in outdoor exposures] showed substantial losses (70-95%) during the first week of exposure. During this time there was heavy rain. On the seventh day there was no rain, and no loss was recorded for any films."

probably behaved similar to methylmercury in being readily taken up by biota and bioaccumulated. If speciation of mercury in sediment cores would allow phenyl mercury to be distinguished from methylmercury, it might shed some light on this potential source of mercury to urban area lakes.

c) Latex Paint—Flow Diagram & Model

The 1990 mercury flow diagram incorporates the calculations for emissions discussed above. Because of the obvious dominance of the volatilization of mercury at the point of paint application, we invested most of the effort on this product in that calculation. The remaining paths to solid waste and wastewater were estimated based on judgement and knowledge of releases to those paths for other product lines. The estimated mercury releases in 2000 and 2005 are 0 kg Hg; therefore, the diagram is not shown in this report.

Applying the first-order exponential degradation to previous years, at the rate of 75% per year, shows that mercury use as far back as 1971 could still be present in 1990, albeit a very small amount. The cumulative total mercury in paint from this estimate is 215 metric tons. Applying the 2% factor for Minnesota to this national estimate gives 1727 kg mercury in paint in 1990. Finally, applying the 75% volatilization rate to this value gives an estimate for mercury emitted in 1990 of 1295 kg.

Mercury release to water was an estimated 66 kg Hg in 1990. This estimate was based on an assumption that two percent of the mercury in latex paint is dumped or washed off into wastewater and 10 percent of the mercury in exterior paint is washed off by precipitation. Exterior paint accounted for 37 percent of the latex paint produced in 1990; therefore, effectively four percent of latex paint (exterior and interior) was assumed washed off by stormwater. This model predicts only one percent will be “released” into land in landfills. Although there is no direct release to water predicted in this model, there will be indirect deposition from the atmospheric releases to both water and land.

d) Latex Paint—Interpretation

(1) Relative importance to the Minnesota Mercury Emissions Inventory

The new estimate of mercury emissions from paint in 1990 is higher than either the estimates from the Minnesota Mercury Air Emissions Inventory, because this analysis assumes there is

carryover from previous years. The estimated release to the atmosphere is 5.7 times higher than the best estimate of 227 kg (500 lb.) for mercury emissions from latex paint in the current Minnesota mercury emissions inventory.[74] This analysis estimated a cumulative total mercury in latex paint in 1990 of 215 metric tons, compared to the 22 metric tons reportedly consumed by this industrial sector in 1990. This latter quantity was used by the Minnesota mercury emissions inventory.[75] If the 50% per year volatilization rate, which was used for the published emissions inventory, was applied to years before 1990, the estimated mercury release for 1990 would be 2146 kg, or about two-thirds higher than the 75% estimate. Thus the approach of accounting for year-to-year residual mercury has an tremendous affect on the estimated mercury emissions inventory for 1990, but it does not significantly change the inventories for 2000 and 2005.

(2) Transferability to Other Governmental Units

This product line should be directly transferable to other governmental units. The only input variable that must be changed in the existing calculations is the percent of the national mercury use. As with all the mercury flow diagrams in this report, the distribution factors for solid waste pathways would most likely need to be adjusted for other governmental units.

11. Dental preparations

a) Dental Preparations - Product Description

Dentists have been using mercury amalgam for over 150 years in the United States. Mercury amalgams typically contain between 42 and 50 percent mercury and approximately 25% silver, with the rest of the amalgam being copper, tin and zinc.[76] [77] Dentists have several choices of materials that can be used to rebuild teeth. These include amalgam, ceramic materials, resin composites, base-metal and noble casting alloys, and glass-ionomer cements. Each has advantages and disadvantages. Amalgam is the most widely used restorative material, with 92% of dentists listing it as the material of choice in 1990. Dentists prefer amalgam because of its durability, ease of manipulation, and low cost. Old low-copper content amalgams last from 8 to 15 years, while improvements in the 1960s and 1970s led to use of high copper alloys that are

---

[74] MPCA 1999. p 23, Table 3.

[75] Jasinski 1994.

[76] W. Trawoeger, "Dental Amalgam and its effect on the environment In Germany," (undated, but implied date is ~ 1995)

[77] Dentsply. Personal communication with Carol Andrews, Barr Engineering on May 1, 2001.

reported to last over 30 years. Placement of amalgam takes 20-50% of the time it takes to restore a tooth with other materials.[78]

b) Dental Preparations - Inventory of Information

(1) Sources

There is a very large volume of information published regarding mercury and dental amalgams. The Wisconsin Mercury Source Book lists over 55 documents as potentially useful literature sources for dental amalgam.[79] The sources of information used to calculate distribution and emission factors for dental amalgam for this project are listed in an annotated bibliography in Appendix B. The data used and Barr's calculations are shown on the worksheet called "Support Data" that is part of the Microsoft Excel workbook for Dental.

(2) Data Gaps

Although at least some data was found regarding nearly all distribution and emission factors related to dental preparations, the data is lacking in some aspect of quality in a number of cases. The most critical gaps in the data reviewed pertaining to dental amalgam are described below. A more exhaustive review of available data may or may not fill some of these gaps. Peer review of the draft flow diagram may identify other potentially useful sources.

Air releases from dental offices: Releases direct to the air from dental offices is one of the most critical data gaps. Mercury is mainly expected to be releases during drilling due to the heat of friction[80] and as mercury vapor from waste amalgam, especially amalgam waste in air/water separators. In addition to the evidence found by Rubin et al[81] indicating that mercury vapor is released from air/water separators, MPCA staff found very high levels of mercury vapor in a closed bucket of waste mercury amalgam stored at WLSSD. Elevated levels of mercury in dental office air were also detected by MPCA staff, even outside of operating hours.

---

[78] Osborne, J.W., University of Colorado School of Dentistry, "Dental Amalgam and Mercury Vapor Release." *Advances in Dental Research,* Volume 6, September, 1992,

[79] Wisconsin Department of Natural Resources. DRAFT Wisconsin Mercury Sourcebook

[80] Osborne, J.W., University of Colorado School of Dentistry, "Dental Amalgam and Mercury Vapor Release." *Advances in Dental Research,* Volume 6, September, 1992,

[81] Rubin, Paul G., Yu, Ming-Ho. "Mercury Vapor in Amalgam Waste Discharged from Dental Office Vacuum Units." Archives of Environmental Health. July/August 1996, Vol. 51, No. 4, pp. :335-337.

Data on mercury releases to air were found in only two references. The first is a study by Rubin et al, "Mercury Vapor in Amalgam Waste Discharged from Dental Office Vacuum Units (Rubin et al, 1994.[82] The second source of information used is MPCA's data regarding mercury concentrations in dental offices collected using a hand-held Lumex monitor. The study by Rubin et al collected valuable information. However, data was collected only at dental offices with air/water separators and external vents. Barr has estimated releases to air by making a number of assumptions based on the limited data available. The resulting estimate of 21 kg/year for 2000 may be incorrect by a factor of ten or more due to the lack of data. Calculations of air releases from dental offices are included in the supporting information worksheet associated with the dental flow diagrams. Additional testing of mercury releases to air through a well-designed study that accounts for all sources at the office is needed.

Air releases from consumers: Very small amounts of mercury are released from dental amalgams in the mouth during chewing, teeth grinding, and other abrasive activities. Releases from consumers to air were calculated by Barr Engineering using data from one Swedish study that appeared to use very rigorous sampling and analysis methods.[83] The main purpose of the study was to quantify the contribution of dental amalgams to the human mercury body burden. Research included testing breath mercury concentrations in 35 healthy adults with no occupational exposure to mercury. Oral mercury concentrations were tested by two methods that yielded similar results ranging from 0 to 124 ug/day release of mercury into the oral cavity, with a median of 25 ug/day. Barr used the breathing rate (15 liter/minute) and retention rate (80%) identified in the appendix to the study, along with assumptions regarding the percentage of the Minnesota population that would be characterized by these emission rates, to estimate a statewide emission rate of 6 kg (13 lb.) mercury per year. The assumption in this calculation that appears to be the least well supported is the retention rate of 80%, for which no basis is given in the report. If the actual retention rate was 50% or 90%, then the estimated releases would be 14 kg per year or 3 kg/year, respectively. The estimated number of individuals with less than average mercury in their breath due to age, better dental health or other reasons and the estimated mercury emission rate from those person are also rough estimates that could be improved through further research and data collection.

---

[82] Ibid.

[83] Skare, I., Engqvist, A. National Institute of Occupational Heath, Stockholm, Sweden. "Human Exposure to Mercury and Silver Released from Dental Amalgam Restorations." Archives of Environmental Health, Vol. 49, No. 5, September/October 1994. Pp. 384-394.

Discharge to waste water: A large number of data points were found regarding the amount of mercury discharged by dental offices to wastewater and the capture efficiency of chair side traps and other traps installed in most office to protect the vacuum pump. The wide range of the data regarding collection efficiency of different systems and the number of different systems in use makes selection of an appropriate estimate to use as a statewide average very difficult. Barr Engineering recommends revising the rough estimates of releases to wastewater and trap collection efficiency after the results of a recent study by the Metropolitan Council Environmental Services (MCES) is released. The estimate of the quantity of mercury that is disposed via the wastewater system is currently calculated in the flow diagram via mass balance.

Distribution of amalgam waste: The fate of amalgam waste collected by traps has been estimated using data collected through voluntary surveys by both WLSSD[84] and MCES.[85] The only data found and used to estimate the fate of mercury-containing solid waste from dental offices other than trap waste (e.g., used amalgam capsules, contaminated cotton balls and equipment, scrap amalgam) is the 1992 WLSSD survey, which had 52 voluntary participants. A larger, statewide survey or a study including a waste sort of dental office waste that looks at all categories (infections waste, MSW, hazardous waste and recycling) could greatly improve the accuracy of these estimates. The flow diagram predictions of which waste categories are of most concern could help to assess the usefulness of and focus for further study.

c) Dental Preparations - Flow Diagram & Model

The flow diagrams for dental preparations differ from the others in that it includes releases from humans via wastewater (human waste) and cremation. Overall the flow diagrams for dental preparations are more complicated than the others because a larger number of potential pathways exist, as well as a more extensive amount of data and literature. Also, additional effort was put into creating a flow diagram that is as inclusive of all potential pathways as possible.

While mercury is expected to move through most compartments in the diagram within a year or less, there are two points at which significant mercury "storage" occurs. First, there is a

---

[84] The Lake Superior Partnership and Western Lake Superior Sanitary District Dental Mercury Pollution Prevention Program.

[85] MCES. Table 3, Minneapolis and St. Paul, Minnesota Metropolitan Area Dental Survey.

significant delay between mercury use (placement as an amalgam) and release. The length of the delay varies depending on the mode of release. For example, release via human waste begins immediately after placement and continues at a slow rate, whereas release due to amalgam removal or cremation is fast but could occur more than 30 years after placement for a new, long-lasting mercury amalgam. Because of the delay in release, the sum of the distribution and emission factors from "consumers" (outputs) does not total 100%. In fact, outputs for the given years exceed inputs. In particular, the amount of mercury removed is estimated to exceed the amount placed. This may be explained by improved dental health, as well as increased use of mercury amalgam alternatives, although the cause may also be lack of accuracy of the data used to calculate inputs and outputs from consumers.

The second point of "storage" between mercury use and release to the environment is in sewage pipes, both at dental offices and throughout wastewater collection systems.[86] [87] [88] Mercury is released from this storage by two main mechanisms: increased solubility due to cleaning and disinfectant chemicals,[89] and physical removal during pipe cleaning . WLSSD found mercury levels in wastewater increased as much as 100 fold during pipe cleaning. The US Naval Dental Research Institute found that some cleaning and disinfectant products released significantly more mercury from fine scrap amalgam than plain water or other products.

At dental offices, mercury can amalgamate to metal piping.[90] A rough statewide estimate of the quantity of mercury that is retained in wastewater lines serving dental units has been made using data from a study by the US Naval Dental Research Institute in which 5 copper waste lines serving dental units were collected and analyzed for total Hg. This study found mercury ranging from 606 to 1603 mg/kg, with an average of 1097 mg/kg. Barr estimates that approximately 35 pounds of mercury are stored in dental office pipes statewide. This estimate may be too high, given that PVC and other non-metal pipes used in some situations are less likely to accumulate

---

[86] Treatment of Wastewater from Dental Vacuum Systems.

[87] Stone, M.E., Pederson E.D., Auxer R.A., Davis, S.L.. "Line Cleanser/Disinfectant Effects on Soluble Mercury Content of Dental Wastewater."

[88] Stone, Mark E, Pederson E.D., Kelly J.R., Ragain J.C., Karaway R.S., Auxer R.A., and Davis, S. January 2000. "The Management of Mercury in the Dental-Unit Wastewater Stream." Scientific Review of Issues Impacting Dentistry, Vol. 2, No. 1. Naval Dental Research Institute (NDRI).

[89] Ibid.

[90] Ibid.

mercury. This estimate could be made more accurate through further investigation regarding the typical lengths and type of pipe associated with dental units.

d) Dental Preparations - Interpretation

(1) Transferability to Other Governmental Units

The flow diagram framework is highly transferable. Changes that would be required to input pertaining to dental offices include the number of dentists using amalgam in a given area, cremation and burial rates. The fate of waste collected by traps and other solid waste may also vary by state depending on the level of effort and timing of educational programs. Other general data such as the population of the state or province and the distribution of wastes to RDF, landfill, etc. would also be required, although that general data would also apply to transferring the frameworks for other products.

(2) Impacts on Minnesota's Mercury Inventory

Total estimated releases to water are higher by a factor of two to three than the release rate estimated by Jackson, et al.[91] A source that was apparently previously unaccounted for is human waste,[92] which contributes 15 percent of the estimated input to wastewater caused by dental amalgam. The percent collection efficiency used in the flow diagram (93%) is also lower than that assumed in Jackson et al (96%).

The estimated releases directly to air from dental offices, 21 kg/year (46 pounds) in 2000 is also higher than the estimate provided for 2000 in MPCA's mercury air emissions inventory. Considering releases from amalgam consumers direct to air as well as loss during transit and disposal further increases the estimated contribution of mercury from dental amalgams to the atmosphere.

---

[91] Jackson et al. "Minnesota's Mercury Contamination Reduction Initiative." Fuel Processing Technology 65-66 (2000) p. 79-99.

[92] Skare, I., 1994

(3) Data regarding Mercury Speciation

Some data indicates that organic mercury may be released from landfills via water (especially gas condensate) and via air.[93] The flow diagram for dental amalgam represents total mercury and does not reflect any data regarding speciation.

12. Bulk Liquid Mercury

a) Bulk Liquid Mercury—Product Description

This product category includes mercury stored in homes, farms, schools, universities, laboratories, and businesses. We assume that the stored mercury is in small quantities that could be dropped off at household hazardous waste collection sites throughout the state.

b) Bulk Liquid Mercury—Inventory of Information

This product line could potentially be one of the most significant sources of mercury release to the environment because discarded liquid mercury is likely to be dumped in a wastewater or stormwater system. Despite its potential importance there is very little known about the amount of liquid mercury in domestic, commercial, and industrial facilities.

Our approach to estimating releases from this source were to contact household hazardous waste programs in the state and mercury recycling companies to determine how much bulk mercury they receive and process. The MPCA's household hazardous waste program does maintain records of bulk liquid mercury collected.[94] No additional information was obtained from recyclers.

WLSSD's household hazardous waste collection program has reported collecting bulk mercury between 1998 and 2000 at their household hazardous waste collection center, which serves approximately 200,000 people.[95] The annual average collection of bulk mercury was assumed to represent 95 percent of the bulk mercury and the Duluth collection area was assumed to represent 10 percent of the Minnesota population. Extrapolating this single collection site estimate to the

---

[93] Lindberg, et al, ORNL, UCF and FL DEP. ORNL Sampling Operations Summary and Preliminary Data Report for PaMSWaD-I, Brevard County Landfill. February 6, 1999.

[94] Jennifer Volkman, Household Hazardous Waste Coordinator, MPCA. Person communication with B. Monson, 6/15/01.

[95] Laura Lee Blaise, WLSSD

entire state gave an total of 700 kg Hg for Minnesota. It was assumed that only 50% of the bulk mercury was disposed of and 95 percent of the disposed mercury was dropped off at a household hazardous collection sites.

c) Bulk Liquid Mercury—Flow Diagram & Model

A flow diagram was created for 2000, based on the general pathways for consumer solid waste disposal and wastewater treatment. The amount of mercury going to stormwater runoff or wastewater was unknown and therefore only a placeholder estimate of 1 kg Hg was assigned to those pathways. The total mercury release from bulk liquid mercury was 29 kg Hg, but this quantity has a high level of uncertainty.

d) Bulk Liquid Mercury—Interpretation

Because of the great uncertainty in the amount of bulk liquid mercury being stored in Minnesota, it is difficult to estimate the importance of this product line. A better estimate could possibly be obtained in the future if household hazardous waste collection programs kept records of the bulk liquid mercury received.

13. Chlor-Alkali Plants

a) Chlor-Alkali Plants—Product Description

The chlor-alkali industry, which produces chlorine, caustic soda, and hydrogen gas, is the largest user of mercury in the US and perhaps globally. Caustic soda adheres to the mercury and the product contains traces of mercury. This category is for a manufacturing process rather than the products. There were 14 mercury-cell chlor-alkali production facilities in 1996.[96] By 2000, the Chlorine Institute reported that two plants closed in 1999 and one in 2000. Thus, at the present time there are 11 facilities.[97] It is not known if more are expected to be closed by 2005. Chlorine-caustic soda production continues to be the largest end use for mercury.[98]

---

[96] Binational Toxics Strategy 1999: Table 10. Original Source: SRI International 1996. Table lists facility name, location, and capacity (tons/year)

[97] Fourth Annual Report of the Chlorine Institute to USEPA, April 13, 2001. http://www.epa.gov/Region5/air/mercury/4thcl2report.html

[98] Rees, R.G. Mercury. USGS Minerals Yearbook—1999

The chlor-alkali industry is the largest user of mercury; however, the amount of chlorine from mercury cells has declined over the last 20 years. Chlor-alkali production using the mercury cell process is the only chlor-alkali process using mercury and accounted for 14.7% of all U.S. chlorine production in 1993.[99] Each mercury cell may contain as much as 3 tons of mercury, with approximately 100 cells at each mercury cell plant. Most plants use the diaphragm cell process, which does not use mercury and is more energy efficient. There were 14 chlor-alkali plants using mercury cells as of 1995, compared to 25 facilities 20 years ago and there are no plans for construction of new mercury cell chlor-alkali facility.

The following total mercury use for chlor-alkali was given by two sources – one USGS, the other the Chlorine Institute, and the Chlorine Institute has the USGS values in their table but do not explain the discrepancy between the two sets of numbers.

Table IV-3. Mercury Consumption / Use in the U.S. Chlor-alkali Industry (metric tons)

Source	1980	**1990**	1991	1992	1993	1994	1995	1996	1997	1998	1999	2000
USGS [100] [101]	326	**247**	183	209	180	135*	153	136	160	NR	NR	NR
Chlorine Institute[102]		**201**	159	134	94	132	150	124	105	94	80	72

Fourth Annual Report of the Chlorine Institute to USEPA, Table 1, states for 1998, 1999, & 2000: "No longer being reported"

The value for 1994 was given in Chlorine Institute report, Table 1, but not in the BNS Table 9.

On July 10, 1997, the Chlorine Institute, on behalf of its members, committed to reducing mercury use 50% by 2005. Based on the 1990-1995 average mercury use of 160 tons (145 metric tons), the goal is to reduce mercury usage by 80 tons (73 metric tons) per year by 2005. For this study, it was assumed that this goal was met and the 2005 mercury usage for this industry was 73 metric tons. It is not clear from this information what the usage was in 2000. Based on the

---

[99] Dungan 1994; cited in the USEPA Mercury Study Report to Congress, p 4-36

[100] Binational Toxics Strategy Table 9 US industrial consumption of Refined Mercury Metal (Source: USGS 1998 Minerals Yearbook)

[101] Table 1 Chlor-Alkali Mercury Cell Process – USA Only. First Annual Report of the Chlorine Institute, 1998. http://www.epa.gov/glnpo/bnsdocs/chlinstbl.htm

[102] ibid

USGS estimates, the mercury usage leveled off from 1994 to 1997, and at without additional data, we will assume it remained at the average of 1994 – 1997, through 2000: 146 metric tons/year. Mercury emissions from this sector were an estimated 10 tons in 1990 and 7 tons in 1995. The drop in emissions was attributed to the closure of several facilities.

Only one Chlor-alkali plant is known to have performed a mercury mass balance: Vulcan Chemical, Port Edwards, WI. The Chlorine Institute has developed guidance for conducting a mass balance. As of 1999, 12 mercury-cell chlor-alkali plant remain in US, 2 in Great Lakes region.

b) Chlor-Alkali Plants - Inventory of Information

(1) Sources

The primary source for this product line was the MPCA's Mercury Grade Caustic Soda Report[103]. The Chlorine Institute has submitted four annual reports to U.S. EPA on their goal to reduce mercury use by 50% and these reports are available on the U.S. EPA web site.[104] Additional information was available from the Mercury Study Report to Congress and the Ross & Associates Report for the BNS. [105]

The concentration of residual mercury in caustic soda has been reported to range from 0.02 parts per million to 0.2 ppm, with a median of 0.1 ppm.[106] However, another source reported the expected maximum concentration from the mercury-cell process to be 0.5 ppm, compared to the membrane process having a maximum of 0.01 ppm Hg, and the Diaphragm process have a maximum concentration of 0.005 ppm (for 50% caustic soda).[107]

---

[103] Kohlasch, F. *Mercury Grade Caustic Soda Report*. June 1, 2000. p 2. The actual reference for these concentrations is not cited in the report but follows a reference to estimated 1997 production by the Chlorine Institute

[104] http://www.epa.gov/Region5/air/mercury/4thcl2report.html

[105] Ross & Associates Environmental Consulting, Ltd. *Great Lakes Binational Toxics Strategy Draft Report for Mercury Reduction Options*. September 1, 2000.

[106] Kohlasch 2000.

[107] Ross & Associates 2000. Table 9, p 56.

c) Chlor-alkali Plants - Flow Diagram & Model

The mercury flow diagram for the chlor-alkali mercury cell process is based on a diagram presented by USGS.[108] The supporting calculations and references are presented in the spreadsheets following the diagram. The estimated quantity of mercury in caustic soda use in Minnesota was 4 kg Hg in 1990 and 1.6 kg Hg in 2000. The estimate for 2005 is assumed to be the same as for 2000. It is simply assumed that all this mercury is discharged into the wastewater system and released to surface water.

We are unable to estimate of the mercury released at the chlor-alkali facility that contributes to the Minnesota mercury emissions inventory. We can, however, estimate the amount of mercury released during the production of caustic soda used in Minnesota if we assume the two percent of product used in Minnesota corresponds to two percent of the mercury released at the chlor-alkali plant. Toxics Release Inventory data for 1996 indicated 8000 kg Hg were directly released into the environment and 136,000 kg were purchased by the industry.[109] Therefore, in 1996 mercury release to the environment was 5.9 percent of the mercury purchased. If we apply that percentage to the mercury purchased by the chlor-alkali industry in our inventory years and multiply by the two percent for Minnesota, the estimated mercury releases are 262 kg Hg for 1990, 93 kg Hg for 2000, and 88 kg Hg for 2005.[110]

d) Chlor-alkali Plants - Interpretation

This flow analysis of the mercury in the caustic soda product from chlor-alkali plants indicates it is a relatively small contributor to mercury release in Minnesota; however, it appears to be directly released to water. Furthermore, a rough estimate of mercury release during the production of the caustic soda suggests that the consumption of this product in Minnesota could account for a substantial release of mercury into the environment.

---

[108] Sznopek and Goonan 2000. USGS Circular 1197, Figure 10, p 9.

[109] Ibid.

[110] Using USGS annual mercury use estimates for the industry

C. Distribution Factors

A general description of distribution factors, the methods used to calculate them, and their accuracy is provided in Part III B of this report (Methods). The information presented below describes the basis for specific distribution factors.

1. Municipal Solid Waste Distribution Factors

Distribution factors were developed using data on the quantity of MSW received by the following waste processing or disposal methods:

- refuse derived fuel (RDF)
- mass burn combustion
- composting
- landfills
- burn barrels

Two slightly different sets of distribution factors for MSW were derived: one for all MSW, and a second for waste generated primarily outside of residential settings, e.g., at commercial or industrial establishments. The difference between the two is the percentage of waste estimated to be managed using on-site combustion (burn barrels). We assumed that waste generated primarily at non-residential settings would be less likely to end up in a burn barrel.

MSW distribution factors for 1990 are based on data for 1990 taken from information provided by the MPCA[111]. Distribution factors for 2000 are based on data for 1999 in the most recent Governor's Select Committee On Recycling and the Environment (SCORE) report[112], which show how all waste generated in Minnesota is managed, <u>including waste that is disposed of out of state</u> (mainly in landfills).[113] We have projected data for 2005 by assuming that (1) more waste will be processed via mechanized material recovery facilities (similar to RDF processing), (2) slightly more waste will be combusted than in 2000, based on the expected re-opening of the waste

---

[111] Jackson et al. Minnesota's Mercury Contamination Reduction Initiative. Fuel Processing Technology 65-66 (2000) p. 79-99

[112] The Report on 1999 SCORE Programs (January 2001)

[http://www.moea.state.mn.us/lc/score99.cfm]

[113] The 1999 data were changed slightly to create a more accurate estimate by accounting for the fact that the Western Lake Superior Sanitation District (WLSSD) changed from combusting waste to landfilling in 2000.

combustor in Perham [114,115] and (3) three mass-burn waste combustors may install materials recovery facilities in front of the incinerator, as has been done in Polk County. This would change the disposal method for approximately 110,000 tons/year. In addition, the MOEA has proposed that the state adopt a policy that would ban landfilling of unprocessed waste by 2008.[116] Although the factors for 2005 are based on tentative projections, the accuracy of the MSW waste distribution factors is relatively high (+/- 5%), except for burn barrels (+/- 50%). Because of strict reporting requirements, Minnesota collects data regarding the fate of solid waste, including waste that leaves the state, and the quantity of waste received at each waste processing or disposal facility. Data regarding the quantity of waste managed by burn barrels is based on a study led by the Western Lake Superior Sanitary District.

2. Infectious Waste Distribution Factors

Distribution factors for infectious waste (commonly called medical waste) are less accurate than those for MSW or sewage sludge, because Minnesota does not aggregate and publish data from infectious waste generators. To estimate infectious waste distribution factors, we interviewed a number of people, including state and county staff that inspect medical waste facilities and operators of the state's largest autoclave facility and the only incinerator. We have arrived at distribution factor estimates for infectious waste that we expect have an accuracy of +/- 20%.
In 1990, infectious waste generated in Minnesota was incinerated at several locations. By 2000, only one infectious-waste incinerator remained in operation—at the Mayo Clinic—burning approximately 5,000 tons/year of waste, of which one-third or approximately 1700 tons/year is medical waste. Some infectious waste generated in Minnesota is also incinerated out of state, such as at the facility in Fargo, North Dakota. Of the remaining infectious waste, it is expected that most is autoclaved and then landfilled. However, there are a number of alternatives for disinfecting "red bag" waste, including technologies that use microwaves ("macrowaves") or chemical treatment. The largest autoclaving facility in the state, operated in St. Paul by Stericycle, processes 6,000 to 12,000 tons/year.

---

[114] Bill Wilson, Polk County, Personal Communication with C. Andrews, Barr, June 1, 2001

[115] Peter Torkelson, MPCA. Personal Communication with C. Andrews, Barr, May 31, 2001.

[116] Minnesota Office of Environmental Assistance. Solid Waste Policy Report. January 2000. Pp. 39-42.

To estimate statewide distribution factors, Barr assumed that the quantity of infectious waste managed by Stericycle is approximately 70 percent of all medical waste generated in Minnesota, which would predict a total of 13,000 tons/year statewide. Based on this, Mayo Clinic incinerates approximately 15% of the infectious waste generated in the state, with most of the rest of it autoclaved at the Stericycle facility in St. Paul.[117] It appears that in Minnesota, since 1995, medical waste is much less often incinerated and more often autoclaved than in other states. Distribution factors for infectious waste can be expected to vary greatly between states and provinces.

3. Demolition Waste Distribution Factors

Distribution factors for demolition debris were only used in the flow diagram for thermostats, although there are a number of other products that could potentially be included in demolition waste, such as fluorescent lamps, other switches and relays, and measurement and control devices. The percentage of thermostats that are disposed of via demolition waste rather than MSW is strictly a rough estimate by Barr Engineering. Because all demolition waste is landfilled, there are no further flow splits (distribution factors) once waste enters the demolition debris category.

4. Sewage Sludge Distribution Factors

In Minnesota, sewage sludge is managed three ways—by incineration, land-spreading, and landfilling (the latter used in Grand Rapids only, primarily for industrial sludge). The sludge distribution factors for 2000 are based on data submitted to the MPCA for that year.[118] Factors for 1990 are taken from MPCA data.[119] We estimated sludge distribution factors for 2005 based on expected changes in sludge management practices. Specifically, WLSSD will change from sludge incineration to generating a soil amendment (considered to be land spreading for the sake of this study) in 2001 and Metropolitan Council Environmental Services (MCES) is expected to continue combusting most sludge through 2005, although it will have the capacity to land-spread ten percent of the sludge from the Metro plant by then. Sludge distribution factors are estimated to have an accuracy of approximately +/- 10%.

---

[117] Michael Reed, Ramsey County Department of Environmental Health. Personal communication with C. Andrews, Barr. June 5, 2001.

[118] Dufresne, J. Personal email communication with Carol Andrews, Barr. May 21, 2001.

[119] Jackson et al. Minnesota's Mercury Contamination Reduction Initiative. Fuel Processing Technology 65-66 (2000) p. 79-99

D. Emission Factors

A general description of emission factors, the methods used to calculate them, and their accuracy is provided in Part III B of this report (Methods). The information presented below describes the basis for specific emission factors.

1. Municipal Solid Waste Storage, Transport and Processing

In addition to estimating emission factors associated with waste disposal methods such as landfilling and combustion, we also estimated mercury releases associated with waste storage, handling and transport between the time when a consumer discards the product and it reaches a disposal facility. The basis for emission factors related to storage, transport and processing of municipal solid waste (MSW) is described in this part.

a) MSW Storage, Transport and Processing: Methods of Release to the Environment

Some mercury-containing products are broken and release mercury before disposal. Many products are likely discarded that contain mercury but are broken during transport (e.g., in a compactor truck); during transfer operations that may include dropping waste into a pit, moving waste across hard surfaces with heavy equipment and/or crushing in a compactor; or during processing at facilities that use equipment such as hammer mills to break waste into smaller pieces. Once the containment is broken, mercury can be released, either to the air through vaporization or directly to water, for example, via surface-water runoff at an auto scrapyard or an unenclosed waste transfer facility that lacks adequate containment.

b) MSW Transport Emission Factors

Based on the data cited under “sources” and the assumptions noted below, Barr estimates that roughly 1.5% of mercury is lost to the environment after a product is discarded and before it is received at an MSW disposal facility (including releases at transfer stations). This is based on the following assumptions (see Excel Spreadsheet General Data.xls for calculations):

- The primary transit stages where mercury may be released are 1) storage as waste at the point of generation, 2) first stage of transport (occurs for all waste), 3) transfer station, and 4) second stage of transport (for waste disposed of via a transfer station).

- In 1997, 2,810,594 tons of MSW were generated in Minnesota, not including waste disposed of using burn barrels. Of this, 1,871,304 tons (66%) were hauled directly to disposal facilities in Minnesota and 939,290 tons (33%) went through transfer stations.
- Most waste is hauled by commercial haulers in a packer trucks (versus "self haul"). Self haul waste goes through less compaction in transit than commercially hauled waste.
- Waste is stored onsite an average of five days prior to transport.

c) MSW Waste Processing Emission Factors

Barr estimates that roughly 1% of mercury is lost to the environment during processing at refuse derived fuel (RDF) facilities. George Southworth, ORNL, estimated air emissions from stacks at Elk River RDF plant at 4 to 8 grams per day. [120] To calculate the amount of mercury lost during waste processing Barr used: the estimated release of mercury per day, the amount of waste processed per year, and an estimated mercury concentration in MSW received at RDF facilities. The mercury release rate from air at waste processing facilities was taken from results of sampling and analysis by MPCA and ORNL as described below.

d) Data Sources and Gaps for MSW Transport and Processing Emission Factors

The primary source of data regarding release of mercury during transport and transfer is S. Lindberg et al[121]. Data regarding the concentration and amount of mercury found in dumpsters and transfer stations was used as shown in General Data.xls to estimate the quantity of mercury released in transit. Although this study is useful, there is still a gap in information that would allow a reasonably accurate estimation of mercury releases in transit. The estimate used in the frameworks is considered to be very rough. Additional data regarding the concentration of mercury found in MSW transfer stations was obtained from the work done by MPCA and ORNL in Minnesota[122].

To convert the data provided regarding mercury concentrations in dumpsters and transfer stations into a statewide emission factor, other information is required, such as the amount of waste

---

[120] Swain, Ed. Email to C. Andrews, Barr Engineering, dated June 22, 2001.

[121] Lindberg, et al, ORNL, UCF and FL DEP. ORNL Sampling Operations Summary and Preliminary Data Report for PaMSWaD-I, Brevard County Landfill. February 6, 1999.

[122] ORNL/MPCA. Table 1. Examples of Mercury Concentrations in Air (October 2000 Sampling trips using Lumex and Tekran in the Twin Cities Area).

managed by transfer stations, the amount of time that waste typically spends in transit, etc. Relatively accurate data was found in the 1999 SCORE report regarding the amount of waste that was handled by transfer stations that year. One shortfall of this data, however, is that it only accounts for waste that is transferred in Minnesota. However, this is not expected to be a source of inaccuracy because most waste that is landfilled or burned outside of Minnesota is transferred to long-haul vehicles before leaving the state

e) Comparing MSW Emission Factors for Transport and Processing to Previous Estimates

In the work reported in Jackson et al, MPCA staff assumed that five percent of mercury is lost from MSW during transit. No additional loss factor was applied to waste processing at RDF or other facilities. The transit estimate calculated as described above is lower than MPCA's earlier estimate. This results in a significantly lower estimate of mercury emissions because, even though the numbers are only a few percentage points different, this emission factor affects a large portion of the mercury-containing products.

2. MSW Disposal

The basis for emission factors related to disposal of MSW are described in this part.

a) MSW Disposal - Methods of Release to the Environment

(1) Composting

Because a small percentage of MSW generated in Minnesota is composted (approximately one percent), mercury releases from composting appear negligible compared to those from other disposal methods. Therefore we did not look extensively for an accurate estimate of mercury releases from MSW composting but used 50% loss from the composting facility as a placeholder estimate. In Jackson et al, Table 2, MPCA shows 0 losses to air from composting.

(2) Landfills

Mercury in products placed in landfills could be released to the environment by: 1) volatilization during waste placement and compaction at the working face; 2) loss to the atmosphere through daily, intermediate or final cover; 3) release via landfill gas vented directly to the atmosphere, passed through a flare or combusted to generate energy; or 4) via collected liquids (leachate) that may be disposed of at a wastewater treatment plant, on site by spray irrigation or as hazardous

waste. Evidence indicates that mercury release occurs via all of these avenues, with the possible exception of release through cover[123]. Even placement of daily cover appears to significantly reduce or prevents mercury release to the atmosphere.

(3) Controlled Combustion

Waste combustors can be divided into two main types: RDF and mass burn. At mass burn facilities, nearly all waste is burned, with the exception of some very large items or unacceptable wastes such as vehicle batteries that may be removed by operators prior to combustion. RDF combustors burn waste that has been processed to remove much of the non-combustible fraction, leaving primarily paper and plastic. Both types of combustors are designed to burn waste very thoroughly. Most mercury entering a waste combustor is vaporized during combustion and leaves the facility either by air or with fly ash, as evidenced by the fact that mercury concentrations in fly ash and emissions are higher than those in bottom ash.[124] In addition mercury released to air via waste combustor exhaust, waste combustor ash may also release mercury through volatilization during ash storage, transport and disposal.

(4) Burn Barrels

Minnesota state law in general bans waste disposal via burn barrels; however, exceptions are made for persons located in certain rural areas that are not served by waste disposal services . However, potentially significant quantities of solid waste are still disposed of by burn barrels, both legally and illegally. Due to the increased temperature, it is expected that some of the mercury contained in waste placed in burn barrels vaporizes and is released to the air. Because burn barrels include less waste handling and do not thoroughly combust waste, it is also expected that mercury contained in some products (e.g., batteries) is not released and remains in the ash. The fate of resulting ashes and the mercury contained in burn barrel ashes is unknown. It is likely that some additional mercury may be released from the ashes.

b) MSW Disposal Emission Factors – Key Assumptions

Mercury content of MSW: Although the quantity of mercury released from waste combustors can be estimated with relatively high accuracy using stack test results, to create an emission factor it is necessary to also estimate of the total amount of mercury entering these facilities. The

---

[123] Lindberg, et al, ORNL, UCF and FL DEP. ORNL Sampling Operations Summary and Preliminary Data Report for PaMSWaD-I, Brevard County Landfill. February 6, 1999.

[124] MPCA (C. Andrews). Ash testing data from waste combustors.

emission factor is then calculated as the amount released (stack test results) divided by the amount received. To estimate the amount of mercury contained in waste received at mass burn and RDF facilities, Barr multiplied the tons of waste burned at each facility by an estimated mercury content (e.g., 0.7 ppm of mercury in waste in year 2000). Barr estimated the mercury content based on analysis of stack test data. The estimated emission factor is relatively sensitive to the selected concentration. Varying the mercury content from 0.5 ppm to 0.9 ppm yields estimated emission factors for mass burn combustors ranging from 0.17 to 0.30. As an example of the impact of this adjustment on estimated releases from products, review of the year 2000 flow diagram for fluorescent lamps shows air emissions of 7 kg/year if mercury waste content is assumed to be 0.9 ppm, and 12 kg/year if it is assumed to be 0.5 ppm.

Emissions from ash landfills: Emissions of mercury to air from incinerator ash landfills are not included in this study except for one product, batteries. Flow diagrams for batteries show one way in which ash landfill emissions could be included. To the best of our knowledge, this is a potential emission source that has not been evaluated. As more mercury is captured in fly ash, the potential for volatilization from landfill disposal increases. Minnesota Rules allow ash monofills to use new, wet ash as cover material. Therefore mercury emissions would not be reduced by cover placement at an ash landfill as they are at an MSW landfill. However, ash is typically well compacted into an ash monofill such that the surface area of ash exposed to air would include only a fraction of the ash disposed of.

c) Data Sources and Gaps

Composting – The emission factor for composting is a “placeholder” estimate by Barr. No data was located on which to create a more accurate estimate, although relevant data may be available.

Landfills - The primary sources of data regarding release of mercury from landfills are studies at three Florida landfills conducted by S. Lindberg et al published in 1999.[125] While this data provides a starting point, the wide range of mercury testing results for the three landfills indicates a need for testing at additional landfills to more accurately predict what emission rates. In addition, because of differences in climatic conditions, operating practices and mercury content of waste, mercury releases from Minnesota landfills could differ significantly from those of landfills

---

[125] Lindberg, et al, ORNL, UCF and FL DEP. ORNL Sampling Operations Summary and Preliminary Data Report for PaMSWaD-I, Brevard County Landfill. February 6, 1999.

in Florida. MPCA staff assumed in Jackson et al that 0.1% of landfilled mercury is lost to the air as "secondary releases" based on earlier studies by S. E. Lindberg and J.L. Price published in 1998. As noted in the more recent paper regarding results of testing at the Brevard County landfill, much higher mercury levels were found in the more recent testing at Brevard.

Controlled Combustion – Emission estimates for 2000 were calculated based on stack test data provided by MPCA staff for MSW combustors for 1990 and 2000. As noted above under "key assumptions," to translate the estimated total quantity of mercury emitted from combustors, it was necessary to assume a typical mercury concentration in MSW. Emission factors for 2005 were estimated based on expected emissions calculated by MPCA staff considering plans for upgrading control equipment. The quantity and quality of data for waste combustors is relatively high.

Burn Barrels - No data was found regarding the percentage of mercury entering burn barrels that is released to air or water. Estimates used in the flow diagrams are rough estimate "placeholder" estimates by Barr.

3. Infectious Waste

a) Method of Release to the Environment

(1) Infectious Waste Transport and Processing

Infectious wastes are generated by medical, veterinary, and research facilities including: hospitals, medical clinics, offices of doctors and dentists, veterinary clinics, nursing homes, medical laboratories, medical and veterinary schools, and funeral homes[126]. Infectious waste, also known as "red bag waste," may contain mercury from a variety of products, especially dental preparations, pharmaceutical products, fever thermometers, measurement and control devices such as blood pressure cuffs, batteries, and liquid mercury.

Mercury contained in infectious waste can be lost to air during transit and transfer via the same routes described for MSW—that is, due to product breakage and agitation that allows mercury to vaporize. In addition to releases caused by compacting and/or moving waste, releases may occur during disinfecting. Infectious wastes that are not disposed of via incineration are processed to disinfect the waste. As noted in the section on infectious waste distribution factors, there are

---

[126] US EPA Mercury Study Report to Congress, 1997.

alternatives to incineration of which the most common in Minnesota is autoclaving. Because the vaporization rate for mercury is temperature-dependent, alternatives that use increased temperature to disinfect waste could increase mercury vaporization rates and loss to air. Methods that increase contact with water or other liquids that are discharged to the environment, directly or via wastewater treatment, could lead to releases to water.

(2) Disposal of Infectious Waste

Infectious waste that is disinfected (e.g., via autoclaving), is typically disposed of by landfill[127] (Ref. Jeff Connell, MPCA). Mercury contained in infectious waste that is incinerated could be released to the environment via the same routes described above for combustion of MSW.

Infectious Waste Emission Factors – Basis and Key Assumptions

Emission factor estimates for medical waste combustors for 2000 and 2005 are based on data pertaining to Mayo Clinic, the only remaining waste combustor in Minnesota. The mercury control efficiency achieved at Mayo Clinic is very high. Total mercury emissions from the facility per year are less than one half of one pound. This facility employs carbon injection to control mercury emissions. The air emission factors estimate of 50% for medical waste incineration used for 1990 is a rough estimate by Barr. A factor closer to 90% would likely be more accurate, as that is the estimated emission rate for mass burn MSW combustors. Because the infectious waste pathway was not used for most wastes, this does not significantly affect results, however, future users of the flow diagrams could improve accuracy by researching a more appropriate 1990 medical waste emission factor.

Emission factors for autoclaves were estimated by Barr based mainly on data and information provided by Minnesota's largest autoclave facility, MPCA staff, and Met Council Environmental Services (MCES) staff (MCES operates the main wastewater treatment system for the Twin Cities). The potential for releases to air and water at the largest autoclaving facility in Minnesota is now controlled using carbon filters. At the end of their useful life, carbon filters that test non-hazardous are disposed of at a solid waste landfill. Water leaving the facility contains less than 2

---

[127] Connell, Jeff. MPCA. Personal communication with Carol Andrews, Barr Engineering. May, 2001.

ppb mercury.[128] Using data on mercury releases to the MCES wastewater system from the Stericycle autoclave that shows mercury discharge rates before and after the pretreatment system was installed in 2000, Barr estimated the percent of mercury entering an autoclave facility that is released via wastewater, for autoclaves with and without pretreatment. We assumed that no pretreatment occurred at any autoclaves in 1990. Assuming that medical waste arriving at Stericycle contains 1 ppm of Hg on average predicts a release rate to water of roughly 2% without pretreatment and less than 0.5% with pretreatment. These are rough estimates, however, due to the lack of accuracy in the estimated mercury content of incoming waste.

4. Mercury Recycling

a) Method of Mercury Release to the Environment

Even when mercury-containing products are turned in to collection programs that send products to "recycling" facilities that extract and capture mercury from products, the potential exists for some mercury to be released to air and/or water. Release could occur during storage, e.g., at a household hazardous waste or other collection facility, during transport, and during storage, handling and processing at recycling facilities. Testing by MPCA staff, ORNL and others at mercury recycling facilities has found elevated mercury levels in air in some locations, including storage bins for glass recovered from lamps.

b) Mercury Recycling - Emission Factor Basis and Key Assumptions

Different emission factors have been projected for different products. The basis for these individual estimates is presented in the flow diagrams and product descriptions. In general, with the exception of lamp recycling, for which some data exists, very little data was found on which to base emission estimates for mercury recycling. Even for lamp recycling facilities the data is taken from one-time tests at a couple of facilities, not a sampling program that would provide data representative of all the different lamp recycling facility design and operating practices.

---

[128] Robert Nordquiest, MCES. Data regarding Mercury Discharges from Stericycle, Inc. (Unpublished. Provided to C. Andrews, Barr Engineering. June 2001)

5. Transport and Processing of Sewage and Sewage Sludge

a) Method of Mercury Release to the Environment

There are a number of potential points at which mercury could be released to air during wastewater treatment, including mercury losses during sewage transport through pipes to a wastewater treatment plant, wastewater treatment, sludge processing and disposal. Studies have found that even mercury that enters wastewater in a relatively non-volatile form such as dental amalgam can be converted through chemical reactions, e.g., with bleach, to a more soluble and volatile form. For wastewater, in addition to emission factors that estimate releases to air, it is also appropriate to assign emission factors for releases to surface waters.

b) Sewage Transport and Treatment - Emission Factor Basis and Key Assumptions

The estimated emission factor to water used for this study for the year 2000 is based on an AMSA study that found 0.150 µg/l Hg in influent and 0.010 in effluent[129], giving a removal efficiency of 93 percent. A lower degree of capture was assumed for 1990, and a slightly better capture rate for 2005, based on the assumptions that, on average, wastewater treatment plants have been improved to capture more solids, including mercury. Some facilities have seen a very substantial improvement between 1990 and 2000. For example, data from WLSSD that indicates capture efficiency between 1990 and 2000 went from 53% to 95%[130]; however, some of this improved capture may be specific to this facility.

An emission factor of 10 percent loss of mercury to air from wastewater in pipes in transit to wastewater treatment was used. This is an extremely rough guess "placeholder" estimate by Barr. There is evidence that significant quantities of mercury are stored in pipes in both a solid form, such as dental amalgam, and as liquid mercury that may act like a solid because of its density.[131, 132] In one study by the Naval Dental Research Institute (NDRI), copper waste lines serving

---

[129] Tim Tuominen. Email to C. Andrews, Jan. 8, 2001.

[130] Kurt Soderberg, WLSSD. Letter to Elizabeth Shevi, MPCA, dated January 25, 2001.

[131] Stone, M.E., Pederson E.D., Auxer R.A., Davis, S.L.. Line Cleanser/Disinfectant Effects on Soluble Mercury Content of Dental Wastewater.

[132] The Lake Superior Partnership and Western Lake Superior Sanitary District Dental Mercury Pollution Prevention Program.

dental units were analyzed for total mercury.[133] Other work by NDRI demonstrated that the average level found was 1097 mg of mercury per kilogram of pipe. The amount of mercury "stored" in pipes at dental offices in Minnesota is discussed under Dental Preparations below. WLSSD has found that mercury levels increase significantly during pipe flushing.[134]
Losses from mercury sludge during sludge dewatering and drying processes at wastewater treatment plants also likely occur, especially from processes that use heat; however, we have not assigned an emission factor to this potential point of release.

6. Disposal of Sewage Sludge

The emission factors for sludge incineration are based on WLSSD data for 1990 and 2000.[135] Data was not obtained for the MCES incinerators. If mercury emissions and control rates at the MCES facilities differ significantly from the estimated emission factors, this could affect estimated air releases from sludge combustion by 25 kg/year or more for 1990 and 2000. The emission factor of 30% (0.30) assigned to sludge incineration for 2005 is based on MCES' goal for mercury control from the proposed new incinerators to be constructed before 2005.

The emission rate from land-applied sewage sludge is largely unknown. Some studies have been done regarding this, however, due to time constraints, the emission factor used in the flow diagrams is a "placeholder" estimate by Barr. Releases from the small amount of domestic wastewater sludge that is landfilled is also a rough estimate by Barr.

7. Breakage and Spills

Mercury may be released to the environment when mercury or mercury-containing products are broken. Although some mercury from spills may be released to surface waters, for the sake of this study, we assumed that spilled mercury volatilizes to air, becomes solid waste, or goes to a wastewater treatment plant. Barr has assigned "placeholder" emission factor estimates for the portion of spilled mercury that is released to air and water.

---

[133] Stone, Mark E, Pederson E.D., Kelly J.R., Ragain J.C., Karaway R.S., Auxer R.A., and Davis, S. January 2000. The Management of Mercury in the Dental-Unit Wastewater Stream. Scientific Review of Issues Impacting Dentistry, Vol. 2, No. 1. Naval Dental Research Institute (NDRI).

[134] Tim Tuominen, personal communication with C. Andrews.

[135] Soderberg, K., WLSSD. Letter to E. Shevi, MPCA, dated January 25, 2001. Subject: Voluntary Mercury Reduction Agreement.

8. Secondary Steel Production

An emission factor from an electric arc furnace baghouse was used in the mercury flow analysis for automobile switches. The emission factor was based on stack test data and mercury analysis of flue dust at the North Star Steel – Minnesota facility. The data from this site indicated 39% of the mercury was emitted to the atmosphere; therefore the emission factor of 0.4 was used for the EAF.

9. Cremation and Burial

It is not customary to remove dental fillings prior to cremation.[136] Barr has assumed that virtually 100% of mercury is released during cremation is based on the thorough degree of combustion achieved and the lack of air pollution controls that are likely to capture mercury. Release of mercury to air or water from burial sites was also considered as a possible route or release.

a) Data Sources and Gaps

Information regarding cremation was obtained from a funeral home chapel[137] and the Minnesota Department of Health Mortuary Science Section[138]. Accuracy of the estimate could be improved by confirming with one or more other sources that dental amalgams are not removed before cremation, and through more in-depth inquiry regarding what, if any, pollution control equipment is typically used at a crematory.

One reference was found that contained results of testing surface water in a cemetery for mercury.[139] Analyses of soil and drain water samples from a Danish cemetery area showed no detectable amounts of Hg in samples collected over 1 year.

---

[136] Washburn-McReavy Funeral Chapel. Personal communication with C. Andrews, Barr Engineering, March 2, 2001.

[137] Washburn-McReavy Funeral Chapel, Minneapolis. Personal communication with C. Andrews, Barr Engineering, March 2, 2001.

[138] Minnesota Department of Health, Mortuary Science Section. Cremation Statistics.

[139] Arehnholt-Bindslev, D., Environmental Aspects of Dental Restorative Materials: A Review of the Danish Situation. Sept. 1999

V. Conclusions

As stated in the MPCA's Request for Proposals Objective, the quantitative framework created by Barr has been designed for use in Minnesota to quantify the fate of mercury for 1990, 2000, and 2005. With appropriate alterations, the framework may also be applied to other years and could be used by other states and provinces or other governmental units. To accurately apply the frameworks to other years and/or locations, some data would require changes, while other data would not. Data used for a number of emission and distribution factors is based on data from outside of Minnesota that would often be directly transferable to other states or provinces.

The data on which some distribution and emission factors are based is specific to Minnesota and/7or selected years. For example, the distribution of medical waste to incinerators versus autoclaving or other treatment methods is based on the trend in medical waste management in Minnesota. Due to a number of factors, including Minnesota's earlier efforts to enforce more strict emission controls on medical waste combustors, it is likely that this distribution is unique to Minnesota.

Factors that are expected to impact waste management habits in different states include the availability of alternatives to properly manage mercury-containing products and spills, the level of funding applied to establishing and promoting mercury collection programs and the quality of promotional/educational programs. A population's average education level also likely impacts the importance that people place on properly managing mercury and the degree to which they understand and act on information provided by educational programs. The level of education attained by the population of Minnesota is above average. In 2000, the percentage of Minnesotans over 18 years old that have completed high school was 90.1%, and the percentage that completed a bachelor's degree or more in college was 28.1%.

The mercury frameworks can be used to quantify potential impacts of increased waste processing on mercury releases to the environment from products. This is an example of how the frameworks can be used to assess the impacts of policy changes.

VI. References

1. Udo de Haes, H., R. Heijungs, G. Huppes, E. van der Voet, and J. Hettelingh. 2000. Full Mode and Attribution Mode in Environmental Analysis. J. Industrial Ecology 4(1): 45-56.

2. MPCA 1999. Report on the Mercury Contamination Reduction Initiative Advisory Council's Results and Recommendations, pages 23-24. (Available on MPCA's mercury web page at http://www.pca.state.mn.us/air/mercury-mn.html)

3. Jackson et al. Minnesota's Mercury Contamination Reduction Initiative. Fuel Processing Technology 65-66 (2000) p. 79-99.

4. Other states should consider potentially significant differences in demographics. Information on all states' income levels is available at the BEA website: (http:www.bea.doc.gove/bea/regional/spi/

5. U.S. EPA Volume II. 1997

6. BNS 1999: Section 3. Waste Disposal and Recycling.

7. KEMI 1997

8. Of these emissions, 66% (47 tons) is from incineration, 20% (14.5 tons) is from recycling steel scrap, 13% (9.2 tons) is from landfills, and 1% (0.8 tons) is from product breakage during use.

9. MPCA. Household Fluorescent Lights: a household hazardous waste fact sheet. (undated).

10. Howley, Joseph, GE Lighting. Letter to US EPA dated August 20, 1996.

11. Walitsky, Paul, Philips. Email to Alexis Cain, EPA Region V, dated 10/4/00, 12:58 PM.

12. US EPA Municipal and Industrial Solid Waste Division, Office of Solid Wastes. Characterization of Products Containing Mercury in Municipal Solid Waste in the United States, 1970 to 2000. March 1992.

13. Howley, Joseph, GE Lighting. Letter to US EPA dated August 20, 1996.

14. Lindberg, et al, ORNL, UCF and fluorescent lamps DEP. ORNL Sampling Operations Summary and Preliminary Data Report for PaMSWaD-I, Brevard County Landfill. February 6, 1999.

15. Ibid.

16. Walitsky, Paul, Philips. Email to Alexis Cain, EPA Region V, dated 10/4/00, 12:58 PM.

17. Howley, Joseph, GE Lighting. Letter to US EPA dated August 20, 1996.

18. Ibid.

19. US EPA Mercury Study Report to Congress, Volume II. 1997. EPA-452/R-97-004.

20. Aucott, Michael. New Jersey DEP. Email to Ed Swain, MPCA, dated December 1, 2000.

21. Lindberg, et al, ORNL, UCF and fluorescent lamps DEP. ORNL Sampling Operations Summary and Preliminary Data Report for PaMSWaD-I, Brevard County Landfill. February 6, 1999.

22. Gilkeson, John, MPCA. Mercury Products Study: A Report to the U.S. Environmental Protection Agency, Region V. April 16, 1996. Revised September 1999.

23. US EPA Mercury Report to Congress. Page 3-4.

24. Ibid.

25. National Electrical Manufacturers Association (NEMA). "Alternatives to Mercury-containing Light Sources." April 2001.

26. US EPA Municipal and Industrial Solid Waste Division, Office of Solid Wastes. Characterization of Products Containing Mercury in Municipal Solid Waste in the United States, 1970 to 2000. March 1992.

27. US EPA Municipal and Industrial Solid Waste Division, Office of Solid Wastes. Characterization of Products Containing Mercury in Municipal Solid Waste in the United States, 1970 to 2000. March 1992.

28. Wisconsin DNR. DRAFT Wisconsin Mercury Sourcebook. May 1997. P. 611.

29. US EPA Municipal and Industrial Solid Waste Division, Office of Solid Wastes. Characterization of Products Containing Mercury in Municipal Solid Waste in the United States, 1970 to 2000. March 1992.

30. Western Lake Superior Regional Household Hazardous Waste Program. Accumulating Annual Report for Mercury. 1998, 1999 and 2000.

31. Blais, Lori, WLSSD. Email communication with Carol Andrews, Barr Engineering, June 28, 2001.

32. Volkman, Jennifer, MPCA. Email communication with Carol Andrews, Barr Engineering, June 27, 2001.

33. NEMA. Thermostat Recycling Corporation Collections by State.

34. Jasinski, S.M., The Materials Flow of Mercury in the United States, (1994)

35. Jasinski, S.M., The Materials Flow of Mercury in the United States, (1994)

36. Sznopek, J.L. and Goonan, T.G., The Materials Flow of Mercury in the Economies of the United States and the World, (1999)

37. Nachtman, J. and D. Hill. "Mercury in Automotive Systems-A White Paper" International Congress & Exposition, paper #960409, SAE. Detroit, MI. February 26-29, 1996;cited in *Toxics in Vehicles: Mercury*, January 2001.

38. MPCA. Automobile Shredder Residue Report. June 1995.

39. Griffith et al. Toxics in Vehicles: Mercury Implications for Recycling and Disposal. January 2001: p 15.

40. Ibid. p.16.

41. Menke, D.M. *Toxic by Design: The Automotive Industry's Continued Use of Mercury*. January 2001. http://www.cleancarcampaign.org/pdfs/toxicsinvehicles_mercury.pdf

42. http://www.epa.gov/oar/mercury.html

43. http://www.epa.gov/Region5/air/mercury/mercury.html

44. Menke, D.M. *Toxic by Design: The Automotive Industry's Continued Use of Mercury*. January 2001.

45. Gilkeson, J. Mercury Products Study: A report to the U.S. Environmental Protection Agency – Region V, (April, 1996)

46. Jasinski, S.M., The Materials Flow of Mercury in the United States, (1994)

47. Sznopek, J.L. and Goonan, T.G., The Materials Flow of Mercury in the Economies of the United States and the World, (1999)

48. National Electrical Manufacturers Association (NEMA), Summary Report of Analyses of Mercury from Consumer Batteries in the Waste Stream (April, 2001).

49. National Electrical Manufacturers Association (NEMA), Summary Report of Analyses of Mercury from Consumer Batteries in the Waste Stream (April, 2001). "Mercury free" means containing less than the naturally occurring background level of mercury as measured in parts per million (< 5 ppm).

50. Jasinski, S.M., The Materials Flow of Mercury in the United States (1994). Personal conversations with Ric Erdheim of NEMA.

51. Personal conversations with Ric Erdheim of NEMA.

52. Jasinski 1994

53. Gilkeson, J. Mercury Products Study. April 16, 1996; Revised August 1998; Revised September 1999, MPCA

54. Gilkeson 1996 p 12

55. Binational Toxics Strategy 1999: Under discussion of FIFRA statute

56. Gilkeson 1996 p 3

57. Ibid.

58. Jasinski 1994.

59. Federal Register: Volume 64, Number 223, Page 633

60. Jackson et al. 2000, Table 1.

61. Ibid.

62. Benazon Environmental Inc. 1998.

63. Scott Turtinen, Minnesota Golf Course Superintendents Association, electronic mail and telephone communication with Christy Henrikson, Barr Engineering.

64. U.S. EPA Mercury Study Report to Congress. 1997. p3-8

65. Agocs et al., 1990; cited in ibid.

66. USGS reports on mercury at http://minerals.usgs.gov/minerals/pubs/commodity/mercury.html; especially used for paint was Jasinski, S.M. The Materials Flow of Mercury in the United States. Information Circular 9412. Table 4.

67. Benazon Environmental, Inc. Historical Mercury Consumption and Release Estimates for the Province of Ontario. April 17, 1998. pp8-9.

68. USEPA Mercury Study Report to Congress, 1997, citing an earlier report: USEPA 1992a

69. Van Horn 1975; cited in USEPA 1997

70. Ibid. references Taylor and Tickle 1969; Taylor et al. 1969; Taylor and Hunter 1972.

71. Minnesota Pollution Control Agency. Options and Strategies for Reducing Mercury Releases, Source Reduction Feasibility and Reduction Strategies Committee Report, MPCA, Policy and Planning Division. October 2, 1998. http://www.pca.state.mn.us/hot/legislature/reports/1999/mercury.pdf

72. Taylor, C.G. and W. Tickle. Radiometric Studies of Mercury Loss from Fungicidal Paints. I. Loss of Phenyl Mercuric Acetate. J. Appl. Chem. 19: 1-7

    Taylor, C.G., W. Tickle, and A. Dwyer. Radiometric Studies of Mercury Loss- from Fungicidal Paints. II. Comparison of Three Phenyl Mercury Compounds. J. Appl. Chem. 19: 8-11

73. Ibid. p4: "All films [in outdoor exposures] showed substantial losses (70-95%) during the first week of exposure. During this time there was heavy rain. On the seventh day there was no rain, and no loss was recorded for any films."

74. MPCA 1999. p 23, Table 3.

75. Jasinski 1994.

76. W. Trawoeger, “Dental Amalgam and its effect on the environment In Germany,” (undated, but implied date is ~ 1995)

77. Dentsply. Personal communication with Carol Andrews, Barr Engineering on May 1, 2001.

78. Osborne, J.W., University of Colorado School of Dentistry, “Dental Amalgam and Mercury Vapor Release.” *Advances in Dental Research*, Volume 6, September, 1992,

79. Wisconsin Department of Natural Resources. DRAFT Wisconsin Mercury Sourcebook

80. Osborne, J.W., University of Colorado School of Dentistry, “Dental Amalgam and Mercury Vapor Release.” *Advances in Dental Research*, Volume 6, September, 1992,

81. Rubin, Paul G., Yu, Ming-Ho. Mercury Vapor in Amalgam Waste Discharged from Dental Office Vacuum Units. Archives of Environmental Health. July/August 1996, Vol. 51, No. 4, pp. :335-337.

82. Ibid.

83. Skare, I., Engqvist, A. National Institute of Occupational Health, Stockholm, Sweden. Human Exposure to Mercury and Silver Released from Dental Amalgam Restorations. Archives of Environmental Health, Vol. 49, No. 5, September/October 1994. Pp. 384-394.

84. The Lake Superior Partnership and Western Lake Superior Sanitary District Dental Mercury Pollution Prevention Program.

85. MCES. “Table 3 Minneapolis and St. Paul, Minnesota Metropolitan Area Dental Survey.

86. Treatment of Wastewater from Dental Vacuum Systems.

87. Stone, M.E., Pederson E.D., Auxer R.A., Davis, S.L.. Line Cleanser/Disinfectant Effects on Soluble Mercury Content of Dental Wastewater.

88. Stone, Mark E, Pederson E.D., Kelly J.R., Ragain J.C., Karaway R.S., Auxer R.A., and Davis, S. January 2000. The Management of Mercury in the Dental-Unit Wastewater Stream. Scientific Review of Issues Impacting Dentistry, Vol. 2, No. 1. Naval Dental Research Institute (NDRI).

89. Ibid.

90. Ibid.

91. Jackson et al. Minnesota’s Mercury Contamination Reduction Initiative. Fuel Processing Technology 65-66 (2000) p. 79-99.

92. Skare, I., 1994

93. Lindberg, et al, ORNL, UCF and FL DEP. ORNL Sampling Operations Summary and Preliminary Data Report for PaMSWaD-I, Brevard County Landfill. February 6, 1999.

94. Jennifer Volkman, Household Hazardous Waste Coordinator, MPCA. Person communication with B. Monson, 6/15/01.

95. Laura Lee Blaise, WLSSD – need to confirm information with her

96. Binational Toxics Strategy 1999: Table 10. Original Source: SRI International 1996. Table lists facility name, location, and capacity (tons/year)

97. Fourth Annual Report of the Chlorine Institute to USEPA, April 13, 2001. http://www.epa.gov/Region5/air/mercury/4thcl2report.html

98. Rees, R.G. Mercury. USGS Minerals Yearbook—1999

99. Dungan 1994; cited in the USEPA Mercury Study Report to Congress, p 4-36

100. Binational Toxics Strategy Table 9 US industrial consumption of Refined Mercury Metal (Source: USGS 1998 Minerals Yearbook)

101. Table 1 Chlor-Alkali Mercury Cell Process – USA Only. First Annual Report of the Chlorine Institute, 1998. http://www.epa.gov/glnpo/bnsdocs/chlinstbl.htm

102. ibid.

103. Kohlasch, F. *Mercury Grade Caustic Soda Report*. June 1, 2000. p 2. The actual reference for these concentrations is not cited in the report but follows a reference to estimated 1997 production by the Chlorine Institute

104. http://www.epa.gov/Region5/air/mercury/4thcl2report.html

105. Ross & Associates Environmental Consulting, Ltd. *Great Lakes Binational Toxics Strategy Draft Report for Mercury Reduction Options*. September 1, 2000.

106. Kohlasch 2000.

107. Ross & Associates 2000. Table 9, p 56.

108. Sznopek and Goonan 2000. USGS Circular 1197, Figure 10, p 9.

109. Ibid.

110. Using USGS annual mercury use estimates for the industry

111. Jackson et al. Minnesota's Mercury Contamination Reduction Initiative. Fuel Processing Technology 65-66 (2000) p. 79-99)

112. The Report on 1999 SCORE Programs (January 2001) [http://www.moea.state.mn.us/lc/score99.cfm]

113. The 1999 data were changed slightly to create a more accurate estimate by accounting for the fact that the Western Lake Superior Sanitation District (WLSSD) changed from combusting waste to landfilling in 2000.

114. Bill Wilson, Polk County, Personal Communication with C. Andrews, Barr, June 1, 2001

115. Peter Torkelson, MPCA. Personal Communication with C. Andrews, Barr, May 31, 2001.

116. Minnesota Office of Environmental Assistance. Solid Waste Policy Report. January 2000. Pp. 39-42.

117. Michael Reed, Ramsey County Department of Environmental Health. Personal communication with C. Andrews, Barr. June 5, 2001.

118. Dufresne, J. Personal email communication with Carol Andrews, Barr. May 21, 2001.

119. Jackson et al. Minnesota's Mercury Contamination Reduction Initiative. Fuel Processing Technology 65-66 (2000) p. 79-99

120. Swain, Ed. Email to C. Andrews, Barr Engineering, dated June 22, 2001.

121. Lindberg, et al, ORNL, UCF and FL DEP. ORNL Sampling Operations Summary and Preliminary Data Report for PaMSWaD-I, Brevard County Landfill. February 6, 1999.

122. ORNL/MPCA. Table 1. Examples of Mercury Concentrations in Air (October 2000 Sampling trips using Lumex and Tekran in the Twin Cities Area).

123. Lindberg, et al, ORNL, UCF and FL DEP. ORNL Sampling Operations Summary and Preliminary Data Report for PaMSWaD-I, Brevard County Landfill. February 6, 1999.

124. MPCA (C. Andrews). Ash testing data from waste combustors.

125. Lindberg, et al, ORNL, UCF and FL DEP. ORNL Sampling Operations Summary and Preliminary Data Report for PaMSWaD-I, Brevard County Landfill. February 6, 1999.

126. US EPA Mercury Study Report to Congress, 1997.

127. Connell, Jeff. MPCA. Personal communication with Carol Andrews, Barr Engineering. May, 2001.

128. Robert Nordquiest, MCES. Data regarding Mercury Discharges from Stericycle, Inc. (Unpublished. Provided to C. Andrews, Barr Engineering. June 2001)

129. Tim Tuominen. Email to C. Andrews, Jan. 8, 2001.

130. Kurt Soderberg, WLSSD. Letter to Elizabeth Shevi, MPCA, dated January 25, 2001.

131. Stone, M.E., Pederson E.D., Auxer R.A., Davis, S.L.. Line Cleanser/Disinfectant Effects on Soluble Mercury Content of Dental Wastewater.

132. The Lake Superior Partnership and Western Lake Superior Sanitary District Dental Mercury Pollution Prevention Program.

133. Stone, Mark E, Pederson E.D., Kelly J.R., Ragain J.C., Karaway R.S., Auxer R.A., and Davis, S. January 2000. The Management of Mercury in the Dental-Unit Wastewater Stream. Scientific Review of Issues Impacting Dentistry, Vol. 2, No. 1. Naval Dental Research Institute (NDRI).

134. Tim Tuominen, personal communication with C. Andrews.

135. Soderberg, K., WLSSD. Letter to E. Shave, MPCA, dated January 25, 2001. Subject: Voluntary Mercury Reduction Agreement.

136. Washburn-McReavy Funeral Chapel. Personal communication with C. Andrews, Barr Engineering, March 2, 2001.

137. Washburn-McReavy Funeral Chapel, Minneapolis. Personal communication with C. Andrews, Barr Engineering, March 2, 2001.

138. Minnesota Department of Health, Mortuary Science Section. Cremation Statistics.

139. Arehnholt-Bindslev, D., Environmental Aspects of Dental Restorative Materials: A Review of the Danish Situation. Sept. 1999

Appendix A: Summary of Minnesota's Mercury-Related State Statutes

§ 115A.932 MERCURY PROHIBITION.

Subdivision 1. **Prohibitions.**

(a) A person may not place mercury or a thermostat, thermometer, electric switch, appliance, gauge, medical or scientific instrument, or electric relay or other electrical device from which the mercury has not been removed for reuse or recycling:

(1) in solid waste; or

(2) in a wastewater disposal system.

(b) A person may not knowingly place mercury or a thermostat, thermometer, electric switch, appliance, gauge, medical or scientific instrument, or electric relay or other electrical device from which the mercury has not been removed for reuse or recycling:

(1) in a solid waste processing facility; or

(2) in a solid waste disposal facility, as defined in section 115.01, subdivision 4.

(c) A person may not knowingly place a fluorescent or high intensity discharge lamp:

(1) in solid waste; or

(2) in a solid waste facility, except a household hazardous waste collection or recycling facility.

This paragraph does not apply to waste lamps generated by households until August 1, 1994.

Subd. 2. **Enforcement.**

(a) Except as provided in paragraph (b), a violation of subdivision 1 is subject to enforcement under sections 115.071 and 116.072.

(b) A violation of subdivision 1 by a generator of household hazardous waste, as defined in section 115A.96, is not subject to enforcement under section 115.071, subdivision 3.

(c) An administrative penalty imposed under section 116.072 for a violation of subdivision 1 by a generator of household hazardous waste, as defined in section 115A.96, may not exceed $700.

HIST: 1992 c 560 s 1; 1993 c 249 s 19; 1997 c 62; 1997 c 216 s 98

MERCURY REDUCTION

§ 116.915 MERCURY REDUCTION.

Subd. 1. **Goal.** It is the goal of the state to reduce mercury contamination by reducing the release of mercury into the air and water of the state by 60 percent from 1990 levels by December 31, 2000, and by 70 percent from 1990 levels by December 31, 2005. The goal applies to the statewide total of releases

from existing and new sources of mercury. The commissioner shall publish updated estimates of 1990 releases in the State Register.

Subd. 2. **Reduction strategies.** The commissioner shall implement the strategies recommended by the mercury contamination reduction initiative advisory council and identified on pages 31 to 42 of the Minnesota pollution control agency's report entitled "Report on the Mercury Contamination Reduction Initiative Advisory Council's Results and Recommendations" as transmitted to the legislature by the commissioner's letter dated March 15, 1999. The commissioner shall solicit, by July 1, 1999, voluntary reduction agreements from sources that emit more than 50 pounds of mercury per year.

Subd. 3. **Progress reports.** The commissioner, in cooperation with the director of the office of environmental assistance, shall submit progress reports to the legislature on October 15, 2001, and October 15, 2005. The reports shall address the state's success in meeting the mercury release reduction goals of subdivision 1, and discuss whether different voluntary or mandatory reduction strategies are needed. The reports shall also discuss whether the reduction goals are still appropriate given the most recent information regarding mercury risks.

HIST: 1999 c 231 s 150 (biennial funding for reduction strategy implementation is provided in c 231 sec. 2,
subd. 3; "*$181,000 the first year* [FY00] *and $142,000 the second year* [FY01] *are for mercury reduction strategies other than education programs*.")

MERCURY EMISSIONS REDUCTION

§ 116.92 MERCURY EMISSIONS REDUCTION.

Subdivision 1. **Sales.** A person may not sell mercury to another person in this state without providing a material safety data sheet, as defined in United States Code, title 42, section 11049, and requiring the purchaser to sign a statement that the purchaser:

(1) will use the mercury only for a medical, dental, instructional, research, or manufacturing purpose; and

(2) understands the toxicity of mercury and will appropriately store and use it and will not place, or allow anyone under the purchaser's control to place, the mercury in the solid waste stream or in a wastewater disposal system, as defined in section 115.01, subdivision 4.

Subd. 2. **Use of mercury.** A person who uses mercury in any application may not place, or deliver the mercury to another person who places residues, particles, scrapings, or other materials that contain mercury in solid waste or wastewater, except for traces of materials that may inadvertently pass through a filtration system during a dental procedure.

Subd. 3. **Labeling; products containing mercury.** A manufacturer or wholesaler may not sell and a retailer may not knowingly sell any of the following items in this state that contain mercury unless the item is labeled in a manner to clearly inform a purchaser or consumer that mercury is present in the item and that the item may not be placed in the garbage until the mercury is removed and reused, recycled, or otherwise managed to ensure that it does not become part of solid waste or wastewater:

(1) a thermostat or thermometer;

(2) an electric switch, individually or as part of another product, other than a motor vehicle;

(3) an appliance;

(4) a medical or scientific instrument; and

(5) an electric relay or other electrical device.

Subd. 4. **Removal from service; products containing mercury.**

(a) When an item listed in subdivision 3 is removed from service the mercury in the item must be reused, recycled, or otherwise managed to ensure compliance with section 115A.932.

(b) A person who is in the business of replacing or repairing an item listed in subdivision 3 in households shall ensure, or deliver the item to a facility that will ensure, that the mercury contained in an item that is replaced or repaired is reused or recycled or otherwise managed in compliance with section 115A.932.

(c) A person may not crush a motor vehicle unless the person has first made a good faith effort to remove all of the mercury switches in the motor vehicle.

Subd. 5. **Thermostats.** A manufacturer of thermostats that contain mercury or that may replace thermostats that contain mercury shall, in addition to the requirements of subdivision 3, provide incentives for and sufficient information to purchasers and consumers of the thermostats for the purchasers or consumers to ensure that mercury in thermostats being removed from service is reused or recycled or otherwise managed in compliance with section 115A.932. A manufacturer that has complied with this subdivision is not liable for improper disposal by purchasers or consumers of thermostats.

Subd. 5a. **Displacement relays.**

(a) A manufacturer of a displacement relay containing mercury is responsible for the costs of collecting and managing its displacement relays to ensure that the relays do not become part of the solid waste stream.

(b) A manufacturer of a displacement relay that contains mercury shall, in addition to the requirements of subdivision 3, provide incentives for, and sufficient information to, purchasers and consumers of the relay to ensure that the relay does not become part of the waste stream. A manufacturer that has complied with this subdivision is not liable for improper disposal by purchasers or consumers of its relays.

(c) A manufacturer subject to this subdivision, or an organization of such manufacturers and its officers, members, employees, and agents, may participate in projects or programs to collect and properly manage waste displacement relays. Any person who participates in such a project or program is immune from liability under state law relating to antitrust, restraint of trade, unfair trade practices, and other regulation of trade or commerce for activities related to the collection and management of the relays under this subdivision.

(d) For the purposes of this subdivision, a "displacement relay" means an electrical flow control device having one or more poles that contain metallic mercury and a plunger which, when energized by a magnetic field, moves into a pool of mercury, displacing the mercury sufficiently to create a closed electrical circuit.

Subd. 6. **Mercury thermometers prohibited.**

(a) A manufacturer, wholesaler, or retailer may not sell or distribute at no cost a thermometer containing mercury that was manufactured after June 1, 2001.

(b) Paragraph (a) does not apply to:

(1) an electronic thermometer with a battery containing mercury if the battery is in compliance with section 325E.125;

(2) a mercury thermometer used for food research and development or food processing, including meat, dairy products, and pet food processing;

(3) a mercury thermometer that is a component of an animal agriculture climate control system or industrial measurement system until such time as the system is replaced or a nonmercury component for the system is available; or

(4) a mercury thermometer used for calibration of other thermometers, apparatus, or equipment, unless a nonmercury calibration standard is approved for the application by the National Institute of Standards and Technology.

Subd. 7. **Fluorescent and high intensity discharge lamps; large use applications.**

(a) A person who sells fluorescent or high intensity discharge lamps that contain mercury to the owner or manager of an industrial, commercial, office, or multiunit residential building, or to any person who replaces or removes from service outdoor lamps that contain mercury, shall clearly inform the purchaser in writing on the invoice for the lamps, or in a separate writing, that the lamps contain mercury, a hazardous substance that is regulated by federal or state law and that they may not be placed in solid waste. This paragraph does not apply to a person who incidentally sells fluorescent or high intensity discharge lamps at retail to the specified purchasers.

(b) A person who contracts with the owner or manager of an industrial, commercial, office, or multiunit residential building, or with a person responsible for outdoor lighting, to remove from service fluorescent

or high intensity discharge lamps that contain mercury shall clearly inform, in writing, the person for whom the work is being done that the lamps being removed from service contain mercury and what the contractor's arrangements are for the management of the mercury in the removed lamps.

Subd. 8. **Ban; toys, games, and apparel.** A person may not sell for resale or at retail in this state a toy or game that contains mercury, or an item of clothing or wearing apparel that is exempt from sales tax under section 297A.25, subdivision 8, that contains an electric switch that contains mercury.

Subd. 8a. **Ban; mercury manometers.** After June 30, 1997, mercury manometers for use on dairy farms may not be sold or installed, nor may mercury manometers in use on dairy farms be repaired. After December 31, 2000, all mercury manometers on dairy farms must be removed from use.

Subd. 9. **Enforcement; generators of household hazardous waste.**

(a) A violation of subdivision 2 or 4, paragraph (a), by a generator of household hazardous waste, as defined in section 115A.96, or a violation of subdivision 8 by a person selling at retail, is not subject to enforcement under section 115.071, subdivision 3.

(b) An administrative penalty imposed under section 116.072 for a violation of subdivision 2 or 4, paragraph (a), by a generator of household hazardous waste, as defined in section 115A.96, or for a violation of subdivision 8 by a person selling at retail, may not exceed $700.

HIST: 1992 c 560 s 3; 1992 c 603 s 37; 1993 c 249 s 28; 1994 c 585 s 38; 1995 c 247 art 1 s 43; 1997 c 62;
1997 c 216 s 116; 2001 c 47. *NOTE: Subdivision 4, paragraph (b), as added by Laws 1992, c 560, s 3, is effective July 1, 1993. See Laws 1992, c 560, s 5. Subdivision 5a, as added by Laws 1997, c 62, is effective July 1, 1998. Subdivision 6, as amended by Laws 2001, c 47, is effective January 1, 2002.*

LAMP RECYCLING

§ 116.93 LAMP RECYCLING FACILITIES.

Subdivision 1. **Definition.** For the purposes of this section, "lamp recycling facility" means a facility operated to remove, recover, and recycle for reuse mercury or other hazardous materials from fluorescent or high intensity discharge lamps.

Subd. 2. **Lamp recycling facility; permits or licenses.**

(a) A person may not operate a lamp recycling facility without obtaining a permit or license for the facility from the agency. The permit or license must require:

(1) a plan for response to releases, including emergency response;

(2) proof of financial responsibility for closure and any necessary postclosure care at the facility which may include a performance bond or other insurance; and

(3) liability insurance or another financial mechanism that provides proof of financial responsibility for response actions required under chapter 115B.

(b) A lamp recycling facility that is licensed or permitted by a county under section 473.811, subdivision 5b, complies with this subdivision if the license or permit held by the facility contains at least all the terms and conditions required by the agency for a license or permit issued under this subdivision.

(c) A lamp recycling facility with a demonstrated capability for recycling that is in operation prior to adoption of rules for a licensing or permitting process for the facility by the agency may continue to operate in accordance with a compliance agreement or other approval by the commissioner until a license or permit is issued by the agency under this subdivision.

HIST: 1993 c 249 s 29

MERCURY MANOMETERS

§ 17.861 REPLACEMENT OF MERCURY MANOMETERS.

The commissioner, in cooperation with the pollution control agency, the office of environmental assistance, dairy equipment manufacturers and suppliers, and other interested parties, shall develop a program to provide replacement nonmercury manometers for a $50 fee and to arrange for the acceptance, disposal, and recycling of the mercury, apparatus, and manometers at no cost to the dairy farmer. The mercury, manometers, and apparatus shall be managed in accordance with sections 115A.932 and 116.92.

HIST: 1997 c 216 s 26. *NOTE: 1997 Laws, Chapter 216, subdivision 7f appropriates $250,000 from the future resources fund to the commissioner of agriculture to fund this program through June 30, 1999.*

ENERGY CONSERVATION/EFFICIENT LIGHTING/UTILITY LAMP COLLECTION PROGRAMS

§ 216B.241 ENERGY CONSERVATION IMPROVEMENT

Subd. 5. Efficient lighting program. (a) Each public utility, cooperative electric association, and municipal utility that provides electric service to retail customers shall include as part of its conservation improvement activities a program to strongly encourage the use of fluorescent and high intensity discharge lamps. The program must include at least a public information campaign to encourage use of the lamps and proper management of spent lamps by all customer classifications.

(b) A public utility that provides electric service at retail to 200,000 or more customers shall establish, either directly or through contracts with other persons, including lamp manufacturers, distributors, wholesalers, and retailers and local government units, a system to collect for delivery to a reclamation or recycling facility spent fluorescent and high intensity discharge lamps from households and from small businesses as defined in section 645.445 that generate an average of fewer than ten spent lamps per year.

(c) A collection system must include establishing reasonably convenient locations for collecting spent lamps from households and financial incentives sufficient to encourage spent lamp generators to take the lamps to the collection locations. Financial incentives may include coupons for purchase of new fluorescent or high intensity discharge lamps, a cash back system, or any other financial incentive or group of incentives designed to collect the maximum number of spent lamps from households and small businesses that is reasonably feasible.

(d) A public utility that provides electric service at retail to fewer than 200,000 customers, a cooperative electric association, or a municipal utility that provides electric service at retail to customers may establish a collection system under paragraphs (b) and (c) as part of conservation improvement activities required under this section.

(e) The commissioner of the pollution control agency may not, unless clearly required by federal law, require a public utility, cooperative electric association, or municipality that establishes a household fluorescent and high intensity discharge lamp collection system under this section to manage the lamps as hazardous waste as long as the lamps are managed to avoid breakage and are delivered to a recycling or reclamation facility that removes mercury and other toxic materials contained in the lamps prior to placement of the lamps in solid waste.

(f) If a public utility, cooperative electric association, or municipal utility contracts with a local government unit to provide a collection system under this subdivision, the contract must provide for payment to the local government unit of all the unit's incremental costs of collecting and managing spent lamps.

(g) All the costs incurred by a public utility, cooperative electric association, or municipal utility for promotion and collection of fluorescent and high intensity discharge lamps under this subdivision are conservation improvement spending under this section.

HIST: 1993 c 249 s 31

Other Minnesota statutes that address mercury:

MS § 115A.9155 Disposal of certain dry cell batteries: prohibition; manufacturer responsibility (Prohibits disposal of mercuric oxide batteries generated by a government agency or communications, industrial, or medical facility; requires battery manufacturers to ensure availability of a management system for waste batteries, publicize it, internalize its costs in sales transactions, and other related provisions. Passed 1990, amended 1991. Also covers silver oxide, nickel-cadmium, and sealed lead acid batteries.)

MS § 115A.956 Solid waste disposal problem materials (Passed 1989, amended 1991.)

MS § 115A.9561 Major appliances (Requires removal and recycling of mercury components from household appliances. Passed 1989, amended 1991, 1992, 1994.) (Major appliances are defined in MS § 115A.03, subd. 17a.)

MS § 115A.961 Household batteries; collection, processing, and disposal (Passed 1989, amended 1994.)

MS § 115A.965 Prohibitions on selected toxics in packaging (Establishes limits on the content of lead, cadmium, mercury, and hexavalent chromium in packaging. Passed 1991, amended 1993-1997.)

MS § 115A.9651 Toxics in specified products; enforcement (Prohibits sale in state of any ink, dye, pigment, paint, or fungicide into which lead, cadmium, mercury, or hexavalent chromium has been introduced. Establishes temporary exemption process to allow development of alternative products. Passed 1991, amended 1993-1997.)

MS § 116.85 Monitors required for incinerators (Subd. 1 requires emission monitoring systems for mercury for any incinerator whose permit contains an emission limit for mercury. Subd. 1a establishes mercury testing requirements, schedules, and various permit and notification requirements. Passed 1989, amended 1990, 1997.)

MS § 116.925 Mercury emissions consumer information act of 1997. Electric energy; Mercury emissions report (Requires persons or utilities who generate or sell power in Minnesota to report to the MPCA the amount of mercury emitted in generating that electricity. The MPCA commissioner shall report mercury emissions at least biennially. Passed 1997.)

MS § 325E.125 General and special purpose battery requirements (Establishes timeline for reduction and elimination of mercury in dry cell batteries. First state law to establish these standards, recently enacted in federal battery law. Passed 1990, amended 1991-1993.)

1992 NON-CODIFIED PROVISIONS

Chapter 560, section 4. Fluorescent and high-intensity discharge lamps; report.

The office of waste management, in consultation with the pollution control agency and manufacturers of fluorescent or high intensity discharge lamps that contain mercury, shall study and report to the legislative commission on waste management by January 1, 1993, with recommendations for fully implementing, by January 1, 1996, a system for ensuring that the toxic materials contained in lamps that are replaced are reused, recycled, or otherwise managed to ensure they are not placed in the solid waste stream or a wastewater disposal system, as defined in Minnesota Statutes, section 115.01, subdivision 8. The director of the office of waste management shall submit a preliminary report to the commission by October 1, 1992. (1992 c 560 s 4)

1993 NON-CODIFIED PROVISIONS

Chapter 249, section 53. Fluorescent and high-intensity discharge lamps; collection study.

The director of the office of waste management, in consultation with representatives of public utilities, electric cooperative associations, and municipal utilities that provide electric service to retail customers, the commissioners of the pollution control agency and the department of public service, the Minnesota technical assistance program, the director of the legislative commission on waste management, residential, commercial, and industrial electric power consumers, local government units, representatives of manufacturers, wholesalers, distributors, retailers, and recyclers of fluorescent and high intensity discharge lamps, and other interested persons, shall examine and evaluate the potential for collection systems for spent fluorescent and high intensity discharge lamps from households and small businesses. The director shall identify barriers to an effective collection system and approaches to reduce and remove those barriers.

By November 1, 1993, the director shall submit a report to the legislative commission on waste management that, at a minimum, recommends:

(1) collection and management systems for spent lamps that are generated within the service areas of public utilities not governed by Minnesota Statutes, section 216B.241, subdivision 5, paragraph (b), cooperative electric associations, and municipal utilities that provide electric service to retail customers; and

(2) an implementation plan that includes provisions for technical assistance to public utilities, electric cooperative associations, municipal utilities, lamp manufacturers, wholesalers, distributors, and retailers, and local government units that establish fluorescent and high intensity discharge lamp promotion programs and collection systems.

Any person may establish or participate in pilot projects to encourage the use and proper management of spent lamps as part of the study required under this section. All the costs incurred by a public utility, cooperative electric association, or municipal utility related to a pilot project are conservation improvement spending for the purposes of Minnesota Statutes 1992, section 216B.241. (1993 c 249 s 53)

Minnesota Rules pertaining to air quality and waste:

Minnesota Air Quality Rules for waste combustors (Chapter 7011.1211-1290), part 7011.1255, requires waste combustor permittees to prepare, submit, and implement a “plan to separate solid wastes which contain mercury.”

The Minnesota Pollution Control Agency’s (MPCA) Special Waste Pilot Project, initiated in September 1993, establishes a Universal Waste-like regulatory framework for waste dental amalgam and all other

wastes containing elemental mercury. The state is currently developing its Universal Waste Rule and will continue similar coverage.

"HIST: c x s y" refers to Chapter x and Section y of Legislative Session Laws of the year noted for each citation.

Statutes (MS §) and Session Laws can be viewed on the Minnesota Legislature web site: http://www.leg.state.mn.us/

Air Quality Rules can be viewed on the MPCA web site: http://www.pca.state.mn.us/rulesregs/index.html